POWER TAKE-OFF

PTO

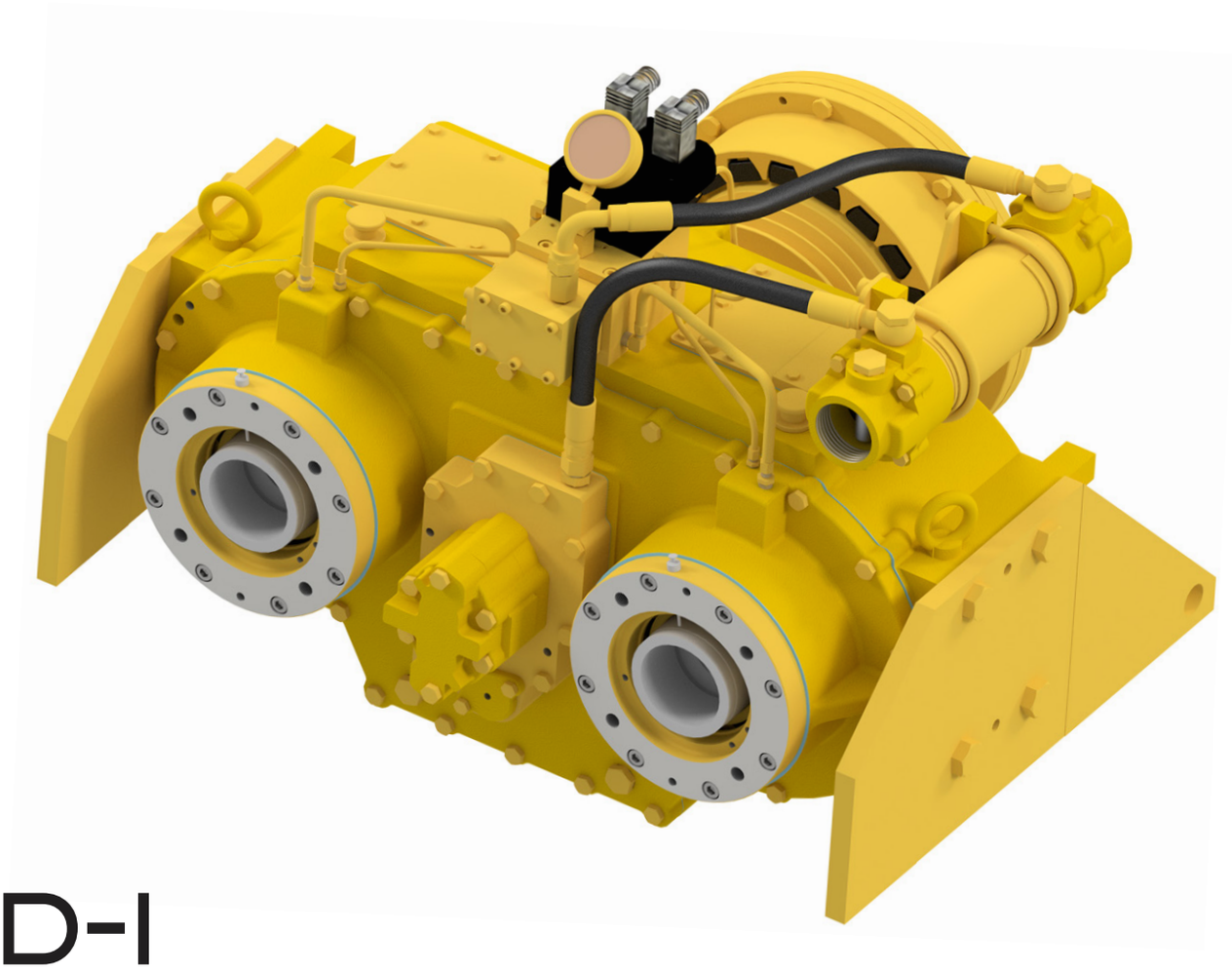

D-I
INDUSTRIAL CO., LTD.

Index

1. PTO Introduction

- D-I Introduction, Business Field 3
- PTO Introduction And Features, How to Select A PTO? 4
- PTO Line-Up 5
- DPO 087 6 ~ 9
- DPO160 10 ~ 13
- DPO210, DPO310 14 ~ 17
- DPO167 18 ~ 25
- DPO410 26 ~ 30
- Recommendations For Machining The Pump Plate Of PTO 31
- Cautions for assembling the hydraulic pump in/on the PTO 31

2. Hydraulic Pumps

- Hydraulic Vane Pumps 32
- Hydraulic Piston Pumps 32
- Pump Size Selection Table 33
- Pump mounting kit selection table 33

3. Control Boxes, Control Panels 34 ~ 35

4. Height Adjustment Block 36

5. Integral shaft supporter 37

6. PTO mounting Example 38 ~ 39

D-I Industrial Co.,Ltd. Introduction

D-I Industrial Co.,Ltd., a leading manufacturer of marine gear in Korea, has been providing Hydraulic Marine Transmissions, Power Take Offs, Steering Systems and Side Thrusters since 1990.

Growing together with customers by providing optimized specifications and ease of use grounded in original technology, D-I has been realizing customers satisfaction through outstanding quality and short lead time under ISO 9001.

D-I Business Field

Marine transmission, Steering system, Power take off, Side Thruster, Flexible coupling, Electronic control system, Integral shaft supporter, Hydraulic pump.

D-I(Dong-I) has been fulfilling its mission with endless self innovation and challenges to ensure user's safety and convenient maritime activities in any ocean beyond Korea.

PTO (Power Take Off) Introduction And Features

A power take-off (Hereunder PTO) is a device that is mounted to a power source (engine) and extracts power to the outside to drive various load devices (pump, compressor, generator, power). It can be mounted on the front (front pulley) or rear (flywheel housing) of the engine, allowing for a variety of applications.

Main Propulsion Engine

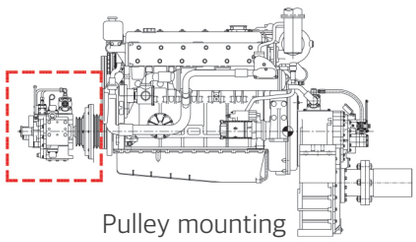

Pulley mounting

Auxiliary Engine

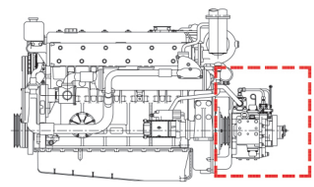

Flywheel mounting

- Variety of product lines for various applications
- Securing high durability by selecting durable friction plates, oil seals, and bearings
- Input rotation CCW / CW available (refer to the direction of rotation)
- Removable bell housing type, replaceable according to engine flywheel specifications
- Output shaft can be expanded using expansion gearbox (DPO167/410)

How To Select A PTO?

1. Consider the required power of driven component

2. The power should be converted to torque(kgf.m)

3. Select a PTO model with same or larger torque than driven component
   * Torque(kgf.m) of PTO ≥ Torque(kgf.m) of Driven component

4. When a PTO is mounted to engine flywheel, select PTO bell housing corresponding engine flywheel housing size(SAE). *Refer to each model introduction.

- 1Hp = 0.7457kw
- Generator horsepower(Hp)=Generator required capacity(KVA) x 1.36 x 0.8 x SF / 0.9
- Hydraulic pump horsepower : Pump flow(l/min) x Pump pressure required(kg/cm2) x SF / 382.5
- Transmitted torque(kgf.m) = 726.1 X Horse power(Hp)/Rotation(rpm)

SF(Load factor)

Winch direct drive 1.5 **Generator for fishing lights 1.5**

Hydraulic pump drive 1.3 **Onboard generator 1.0**

PTO Line-Up

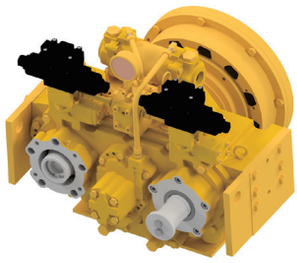

[DPO 087]

[DPO160]

[DPO210, 310]

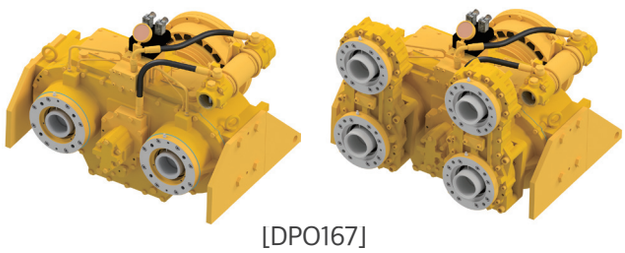

[DPO167]

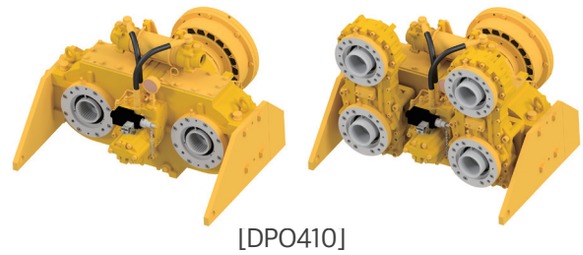

[DPO410]

Model	Ratio	Max Input RPM	Input Capacity		No. of Clutch	No. Of Output Shaft	Output Torque (kgf.m) (L/R)	Max Output RPM	Weight (kg)	Engine mounting Type
			HP	kW						
DP0 087	0.849	2547	385	287	2 Clutches (Left / Right)	2	51/51	3000	123	SAE#1, 2, 3 PULLEY
	1:1	3000	454	338			55/55	3000	124	
DPO160	1:1	3000	661	492	1 Clutch	1	160	3000	107	SAE#1, 2, 3 PULLEY
DPO167	0.6603	1981	872	650	2 Clutches (Left / Right)	2 ~ 4	160/160	3000	380	SAE#1, 2 PULLEY
	0.7255	2177	959	715				3000	380	
	0.8333	2500	1101	821				3000	382	
	0.9556	2867	1263	942				3000	384	
	1.3784	3000	1322	985				2176	392	
	1.5143	3000	1322	985				1981	394	
DPO210	1:1	3000	867	646	1 Clutch	1	210	3000	210	SAE#1, 2 PULLEY
DPO310	1:1	3000	1280	955	1 Clutch	1	310	3000	219	SAE#1, 2 PULLEY
DPO410	0.6607	1784	982	732	1 Clutch	2~4	400/0 200/200 0/400	2700	371	SAE#1, 2 PULLEY
	0.7692	2077	1144	853				2700	369	
	0.86	2322	1279	953				2700	369	
	0.9787	2642	1455	1085				2700	373	

DPO 087

2 Outputs

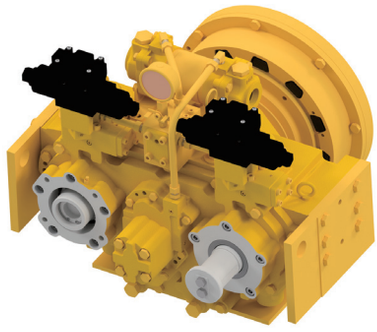

DPO 087 can be mounted to the engine pulley or flywheel housing and has 2 output shafts each to be driven an independent clutch.
There are two types of output connection methods.
- Pump mounting type
- Shaft type.

Model	Ratio	Max Input RPM	Input Capacity		No. of Clutch	No. Of Output Shaft	Output Torque (kgf.m) (L/R)	Max Output RPM	Weight (kg)	Engine mounting Type
			HP	kW						
DPO 087	0.849	2547	358	287	2 Clutches (Left / Right)	2	51/51	3000	123	SAE#1, 2, 3 PULLEY
	1:1	3000	454	338		2	55/55	3000	124	

※ When ordering a new PTO, refer to pages 34 to 35 and order the control box or control panel separately.

DPO 087 Dimensions

※ When ordering the pump mounting type, please refer to the page 7 and order the pump mounting kit separately.

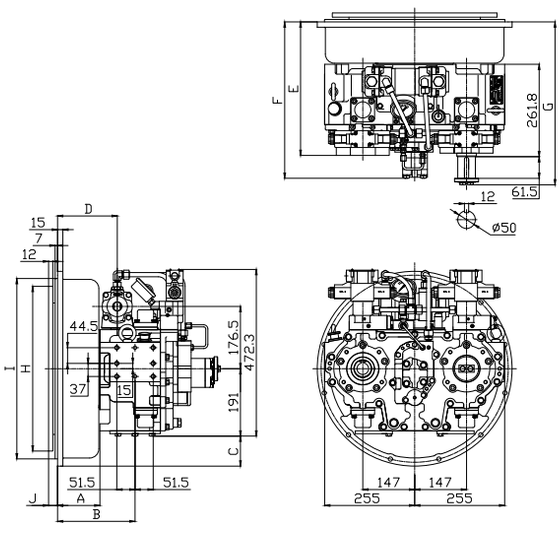

[Engine flywheel housing mounting type]

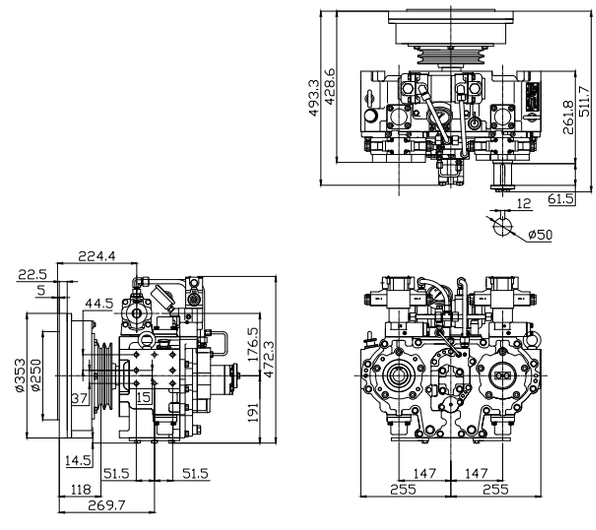

[Engine pulley mounting type]

mm

INPUT TYPE	OUTPUT TYPE	A	B	C	D	E	F	G	H	I	J
SAE1-14"	A, B, C, D	120	219	85	169	378	443	461	466	511	25
SAE2-11.5"	A, B, C, D	135	234	53	184	393	458	476	352	447	39
SAE3-11.5"	A, B, C, D	120	219	34	169	378	443	461	352	409	39
PULLEY	A, B, C, D	Please refer to the drawing above									

Output Types

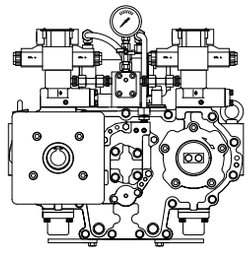

A type
Left: pump, Right: shaft

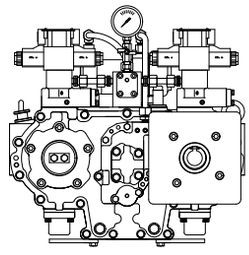

B type
Left: shaft, Right: pump

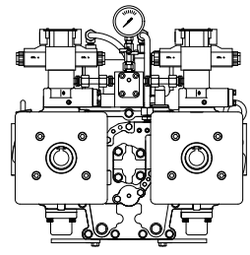

C type
Left: pump, Right: pump

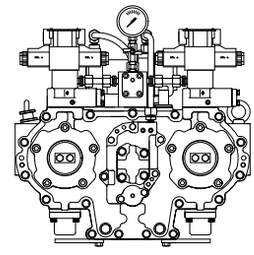

D type
Left: shaft, Right: shaft

※ The above picture is to help you understand the output type. Please refer to the following and purchase the pump mounting kit separately.

DPO 087 Dimensions Of Pump Mounting Kit

pump plate, pinion coupling

※ When ordering DPO 087 pump mounting type (A, B, C type), refer to the following and order the suitable pump mounting kit for the pump which will be installed to the PTO.

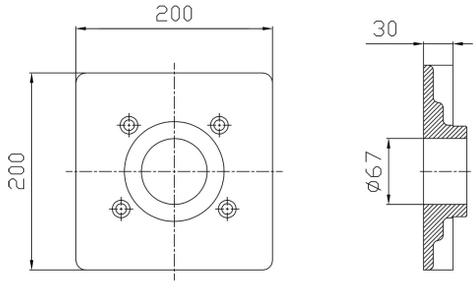

[Not machined pump plate]

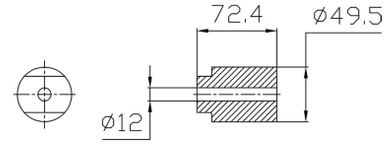

[Not machined pinion coupling]

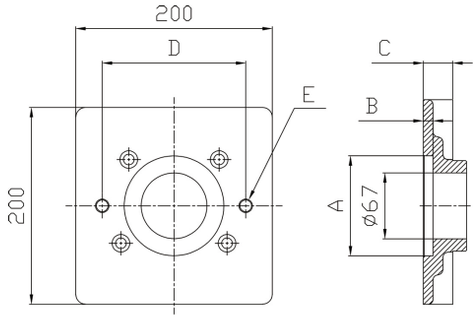

[Machined pump plate]

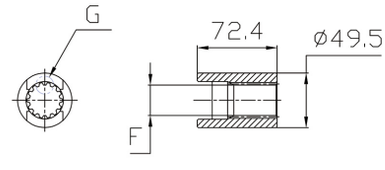

[Machined pinion coupling]

mm

Part Number	A	B	C	D	E	F	G	No. Of Teeth	Remarks
AS_T087216	-	-	-	-	-				Not machined
AS_T087216A	Ø82.55	7	30	106	2-M10P1.5	19	DP 16/32	13	
AS_T087216B	Ø101.65	10	30	146	2-M14P2.0	19	DP 16/32	13	
AS_T087216C	Ø127.1	9	30	162	2-M14P2.0	27.6	DP 12/24	14	
AS_T087216E	Ø127.1	15	30	181	2-M16P2.0	27.6	DP 12/24	14	

※ If the dimensions of pump you would like to use with DPO087 are not listed in the table above, please order AS_T087216 (Not machined pump mounting kit) and machine it according to the specifications of the pump.

DPO 087 Order Code Configuration

※ An example for DPO 087 (F) ratio 1:1
Input: engine pulley mounting type
Output: left pump mounting type, right shaft type

DPO- F 087 A 1:1 S

- **S** — Engine mounting Type
  Pulley: S
  Flywheel Housing : 1-14", 2-11.5", 3-11.5"
- **1:1** — Ratio
  1:1, 0.85:1
- **A** — Output type
  A, B, C, D
  *Refer to page 7
- **087** — Model
  087, 160, 167, 210, 310, 410
- **F** — Input Rotation Direction
  F, R *Refer to right picture
- **DPO-** — Dong-I PTO

Rotation Direction Type

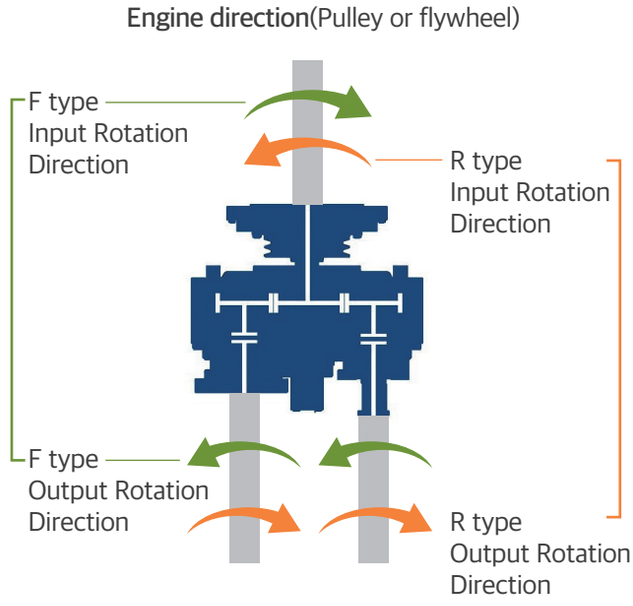

DPO 087 Order Code Selection Table

No	Rotation Type	Output Type	Ratio	Engine mounting Type	Order Code	Output Shape
1	F	A	1:1	Pulley	DPO-F087 A 1:1 S	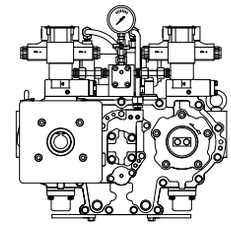
2				1-14"	DPO-F087 A 1:1 1-14"	
3				2-11.5"	DPO-F087 A 1:1 2-11.5"	
4				3-11.5"	DPO-F087 A 1:1 3-11.5"	
5			0.85:1	Pulley	DPO-F087 A 0.85:1 S	
6				1-14"	DPO-F087 A 0.85:1 1-14"	
7				2-11.5"	DPO-F087 A 0.85:1 2-11.5"	
8				3-11.5"	DPO-F087 A 0.85:1 3-11.5"	
9	F	B	1:1	Pulley	DPO-F087 B 1:1 S	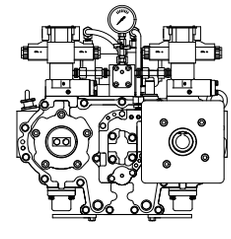
10				1-14"	DPO-F087 B 1:1 1-14"	
11				2-11.5"	DPO-F087 B 1:1 2-11.5"	
12				3-11.5"	DPO-F087 B 1:1 3-11.5"	
13			0.85:1	Pulley	DPO-F087 B 0.85:1 S	
14				1-14"	DPO-F087 B 0.85:1 1-14"	
15				2-11.5"	DPO-F087 B 0.85:1 2-11.5"	
16				3-11.5"	DPO-F087 B 0.85:1 3-11.5"	
17	F	C	1:1	Pulley	DPO-F087 C 1:1 S	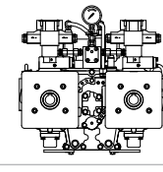
18				1-14"	DPO-F087 C 1:1 1-14"	
19				2-11.5"	DPO-F087 C 1:1 2-11.5"	
20				3-11.5"	DPO-F087 C 1:1 3-11.5"	

DPO 087 Order Code Selection Table

No	Rotation Type	Output Type	Ratio	Engine mounting Type	Order Code	Output Shape
21	F	C	0.85:1	Pulley	DPO-F087 C 0.85:1 S	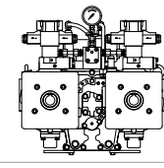
22				1-14"	DPO-F087 C 0.85:1 1-14"	
23				2-11.5"	DPO-F087 C 0.85:1 2-11.5"	
24				3-11.5"	DPO-F087 C 0.85:1 3-11.5"	
25	F	D	1:1	Pulley	DPO-F087 D 1:1 S	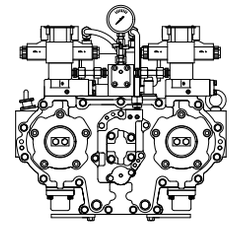
26				1-14"	DPO-F087 D 1:1 1-14"	
27				2-11.5"	DPO-F087 D 1:1 2-11.5"	
28				3-11.5"	DPO-F087 D 1:1 3-11.5"	
29			0.85:1	Pulley	DPO-F087 D 0.85:1 S	
30				1-14"	DPO-F087 D 0.85:1 1-14"	
31				2-11.5"	DPO-F087 D 0.85:1 2-11.5"	
32				3-11.5"	DPO-F087 D 0.85:1 3-11.5"	
33	R	A	1:1	Pulley	DPO-R087 A 1:1 S	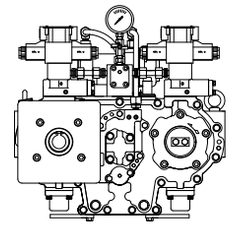
34				1-14"	DPO-R087 A 1:1 1-14"	
35				2-11.5"	DPO-R087 A 1:1 2-11.5"	
36				3-11.5"	DPO-R087 A 1:1 3-11.5"	
37			0.85:1	Pulley	DPO-R087 A 0.85:1 S	
38				1-14"	DPO-R087 A 0.85:1 1-14"	
39				2-11.5"	DPO-R087 A 0.85:1 2-11.5"	
40				3-11.5"	DPO-R087 A 0.85:1 3-11.5"	
41	R	B	1:1	Pulley	DPO-R087 B 1:1 S	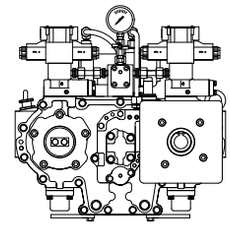
42				1-14"	DPO-R087 B 1:1 1-14"	
43				2-11.5"	DPO-R087 B 1:1 2-11.5"	
44				3-11.5"	DPO-R087 B 1:1 3-11.5"	
45			0.85:1	Pulley	DPO-R087 B 0.85:1 S	
46				1-14"	DPO-R087 B 0.85:1 1-14"	
47				2-11.5"	DPO-R087 B 0.85:1 2-11.5"	
48				3-11.5"	DPO-R087 B 0.85:1 3-11.5"	
49	R	C	1:1	Pulley	DPO-R087 C 1:1 S	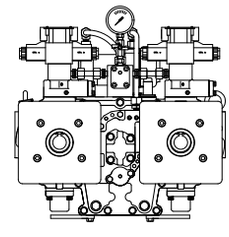
50				1-14"	DPO-R087 C 1:1 1-14"	
51				2-11.5"	DPO-R087 C 1:1 2-11.5"	
52				3-11.5"	DPO-R087 C 1:1 3-11.5"	
53			0.85:1	Pulley	DPO-R087 C 0.85:1 S	
54				1-14"	DPO-R087 C 0.85:1 1-14"	
55				2-11.5"	DPO-R087 C 0.85:1 2-11.5"	
56				3-11.5"	DPO-R087 C 0.85:1 3-11.5"	
57	R	D	1:1	Pulley	DPO-R087 D 1:1 S	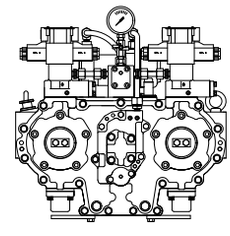
58				1-14"	DPO-R087 D 1:1 1-14"	
59				2-11.5"	DPO-R087 D 1:1 2-11.5"	
60				3-11.5"	DPO-R087 D 1:1 3-11.5"	
61			0.85:1	Pulley	DPO-R087 D 0.85:1 S	
62				1-14"	DPO-R087 D 0.85:1 1-14"	
63				2-11.5"	DPO-R087 D 0.85:1 2-11.5"	
64				3-11.5"	DPO-R087 D 0.85:1 3-11.5"	

DPO 160

1 Output

Aluminum Body Hydraulic PTO

DPO160 can be mounted to either engine pulley or flywheel housing, the output shaft drives to the same rotation as the engine's.

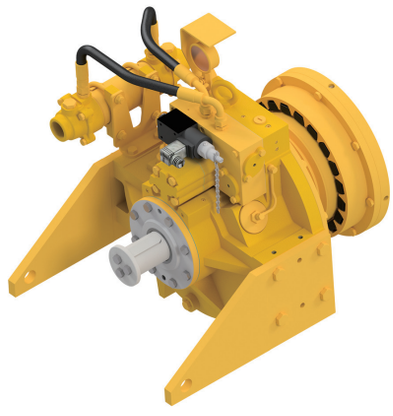

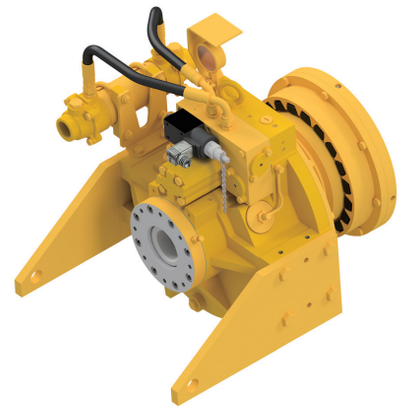

Model	Ratio	Max Input RPM	Input Capacity		No. of Clutch	No. Of Output Shaft	Output Torque (kgf.m) (L/R)	Max Output RPM	Weight (kg)	Engine mounting Type
			HP	kW						
DPO160	1:1	3000	661	492	1 Clutch	1	160	3000	107	SAE#1, 2, 3 PULLEY

※ When ordering a new PTO, refer to pages 34 to 35 and order the control box or control panel separately.

Output Types

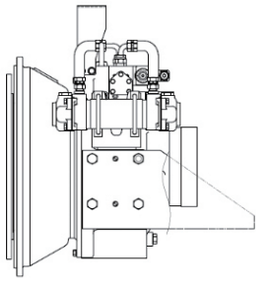

P type
Output : pump mounting
Input : flywheel housing mounting

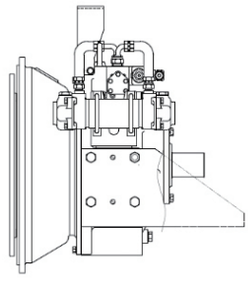

S type
Output : shaft type
Input : flywheel housing mounting

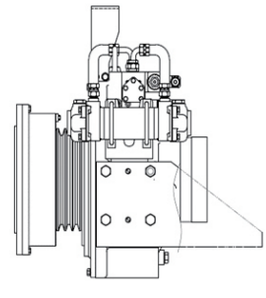

P type
Output : pump mounting
Input : pulley mounting

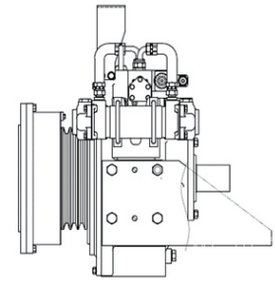

S type
Output : shaft type
Input : pulley mounting

DPO160 Dimensions

※ When ordering the pump mounting type(P type), refer to the page 13 and order the pump mounting kit separately.

[OUTPUT : PUMP MOUNTING TYPE]

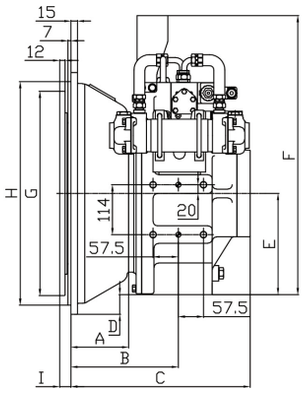

[Engine flywheel housing mounting type]

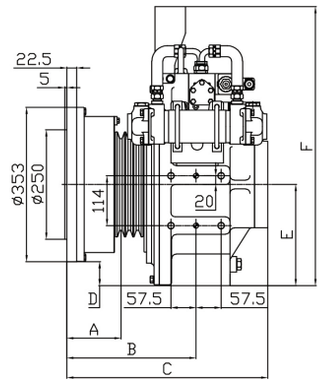

[Engine pulley mounting type]

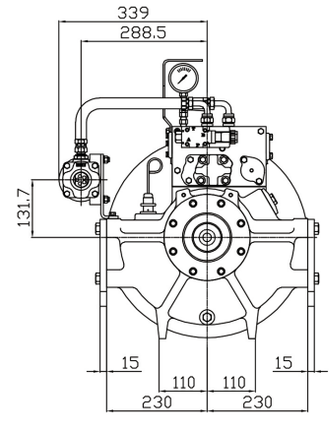

[OUTPUT : SHAFT TYPE]

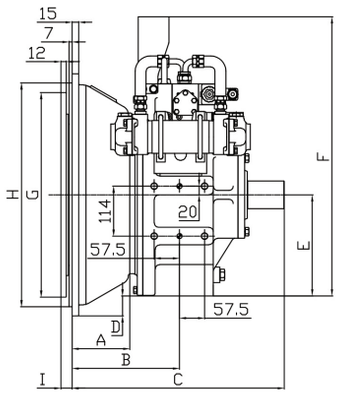

[Engine flywheel housing mounting type]

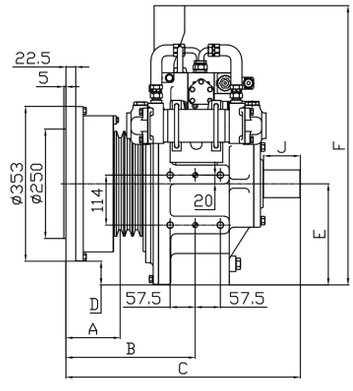

[Engine pulley mounting type]

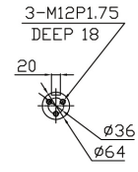

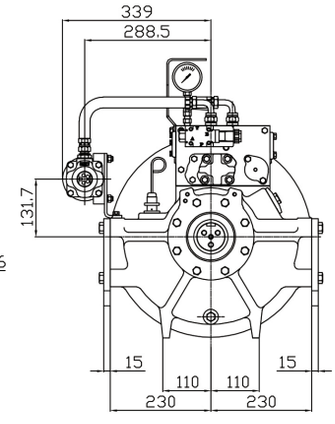

mm

INPUT TYPE	OUTPUT TYPE	A	B	C	D	E	F	G	H	I
PULLEY	S	123	295	534	54	231	637	-	-	-
PULLEY	P	123	295	459	54	231	637	-	-	-
SAE1-14"	S	132	2452	485	45	231	637	466	511	25
SAE1-14"	P	132	245	409	45	231	637	466	511	25
SAE2-11.5"	S	118	231	470	13	231	637	352	447	39
SAE2-11.5"	P	118	231	395	13	231	637	352	447	39

DPO160 Order Code Configuration | Rotation Direction Type

※ An example for DPO 160 (F) Ratio 1:1,
Input : engine pulley mounting
Output : Shaft type

DPO- F 160 S 1:1 S

- **S** — Engine mounting Type
  Pulley: S
  Flywheel Housing : 1-14", 2-11.5", 3-11.5"
- **1:1** — Ratio
  1:1
- **S** — Output type
  S, P
  *Refer to page 10
- **160** — Model
  087, 160, 167, 210, 310, 410
- **F** — Input Rotation Direction
  F, R *Refer to right picture
- **DPO-** — D-I PTO

Engine direction(Pulley or Flywheel)

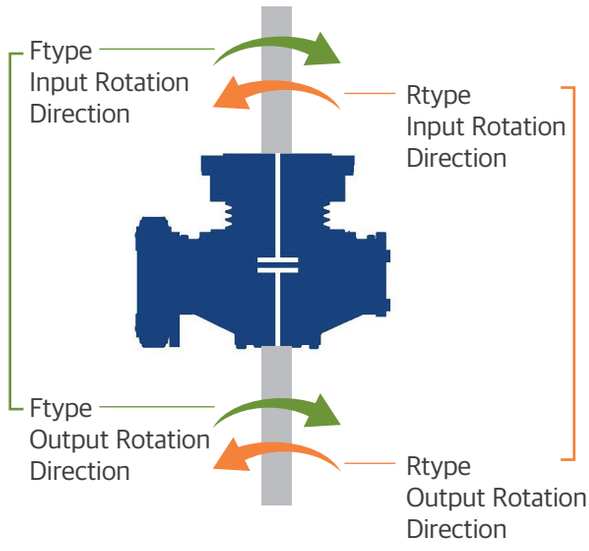

DPO160 Order Code Selection Table

No	Rotation Type	Output Type	Ratio	Engine mounting Type	Order Code	Output Shape
1	F	P	1:1	Pulley	DPO-F160 P 1:1 S	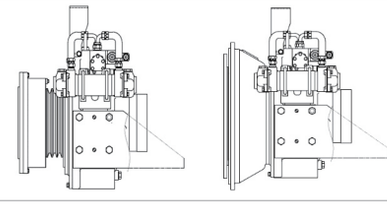
2				1-14"	DPO-F160 P 1:1 1-14"	
3				2-11.5"	DPO-F160 P 1:1 2-11.5"	
4				3-11.5"	DPO-F160 P 1:1 3-11.5"	
5		S	1:1	Pulley	DPO-F160 S 1:1 S	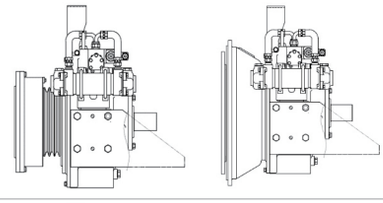
6				1-14"	DPO-F160 S 1:1 1-14"	
7				2-11.5"	DPO-F160 S 1:1 2-11.5"	
8				3-11.5"	DPO-F160 S 1:1 3-11.5"	
9	R	P	1:1	Pulley	DPO-R160 P 1:1 S	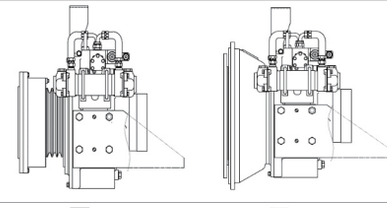
10				1-14"	DPO-R160 P 1:1 1-14"	
11				2-11.5"	DPO-R160 P 1:1 2-11.5"	
12				3-11.5"	DPO-R160 P 1:1 3-11.5"	
13		S	1:1	Pulley	DPO-R160 S 1:1 S	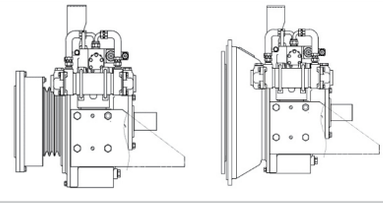
14				1-14"	DPO-R160 S 1:1 1-14"	
15				2-11.5"	DPO-R160 S 1:1 2-11.5"	
16				3-11.5"	DPO-R160 S 1:1 3-11.5"	

DPO160 Dimensions Of Pump Mounting Kit

pump plate, pinion coupling

※ When ordering DPO160 pump mounting type, refer to the following and order the suitable pump mounting kit for the pump which will be installed to the PTO.

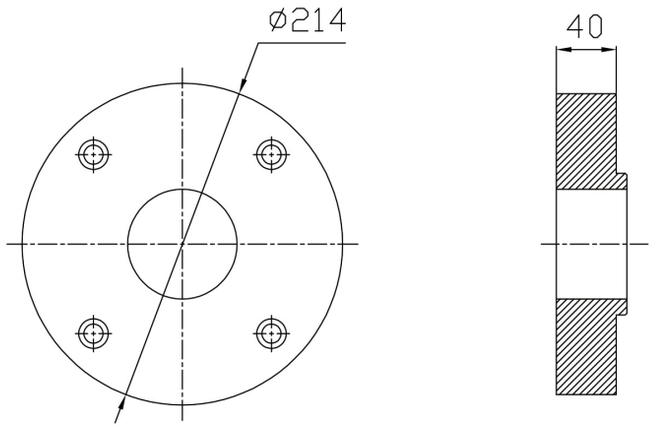

[Not machined pump plate]

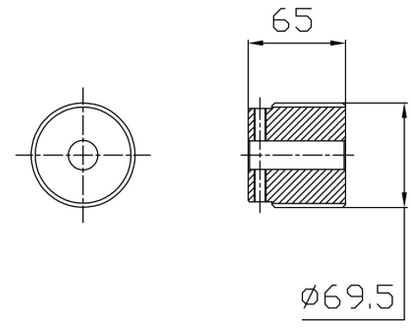

[Not machined pinion coupling]

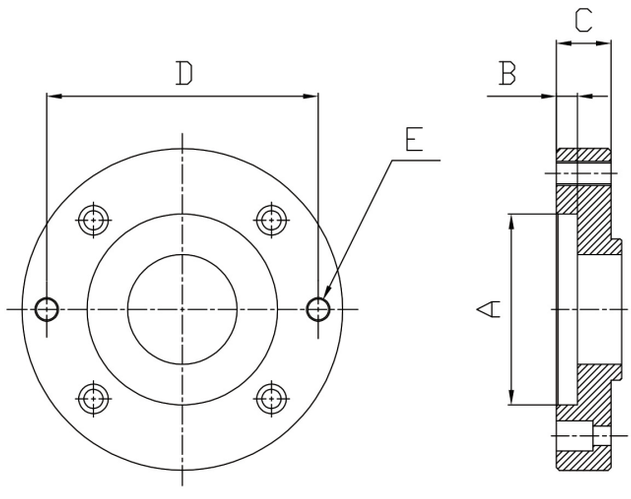

[Machined pump plate]

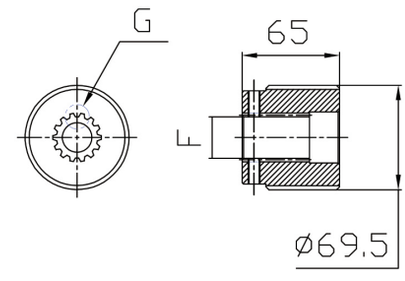

[Machined pinion coupling]

mm

Part Number	A	B	C	D	E	F	G	No. Of Teeth	Remarks
AS_T160615	-	-	-	-	-	-	-		Not machined
AS_T160616	Ø127.03	14	36.5	181	2-M16P2.0	27.6	DP 12/24	14	
AS_T160617	Ø101.65	11	33.5	146	2-M12P1.75	19	DP 16/32	13	

※ If the dimensions of pump you would like to use with DPO160 are not listed in the table above, please order AS_T160615 (Not machined pump mounting kit) and machine it according to the specifications of the pump.

DPO 210, DPO 310 | 1 Output

DPO210/310 can be mounted to either engine pulley or flywheel housing, the output shaft drives to the same rotation as the engine's.

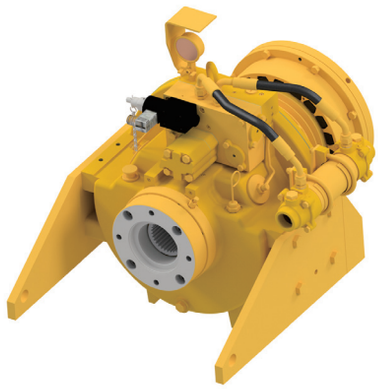

Model	Ratio	Max Input RPM	Input Capacity		No. of Clutch	No. Of Output Shaft	Output Torque (kgf.m) (L/R)	Max Output RPM	Weight (kg)	Engine mounting Type
			HP	kW						
DPO210	1:1	3000	867	646	1 Clutch	1	210	3000	210	SAE#1, 2 PULLEY
DPO310	1:1	3000	1280	955	1 Clutch	1	310	3000	219	

※ When ordering a new PTO, refer to pages 34 to 35 and order the control box or control panel separately.

Output Types

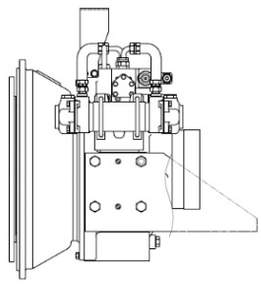

P type
Output : pump mounting
Input : flywheel housing mounting

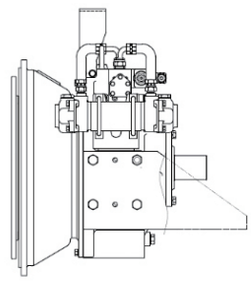

S type
Output : shaft type
Input : flywheel housing mounting

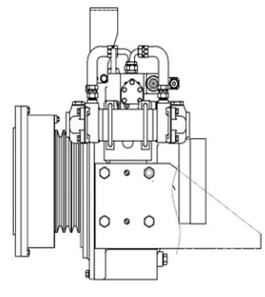

P type
Output : pump mounting
Input : pulley mounting

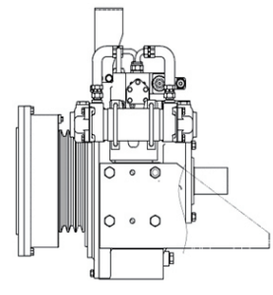

S type
Output : shaft type
Input : pulley mounting

DPO210/310 Dimensions

※ When ordering the pump mounting type, refer to the page 17 and order the pump mounting kit separately.

[OUTPUT : PUMP MOUNTING TYPE]

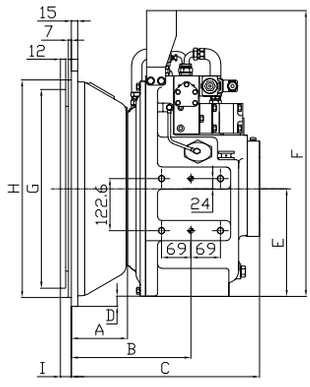

[Engine flywheel housing mounting type]

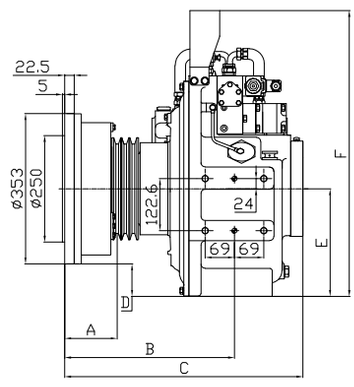

[Engine pulley mounting type]

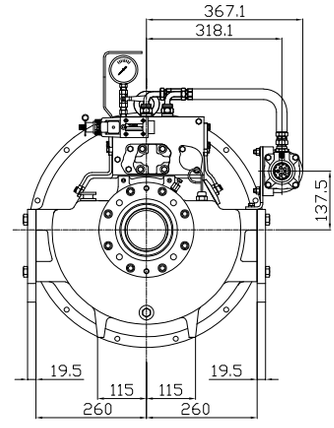

[OUTPUT : SHAFT TYPE]

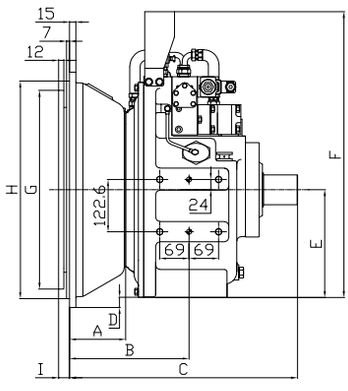

[Engine flywheel housing mounting type]

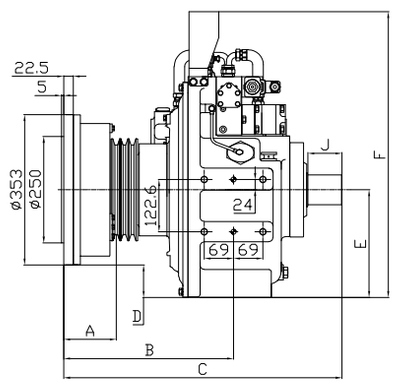

[Engine pulley mounting type]

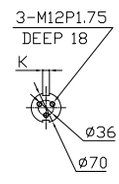

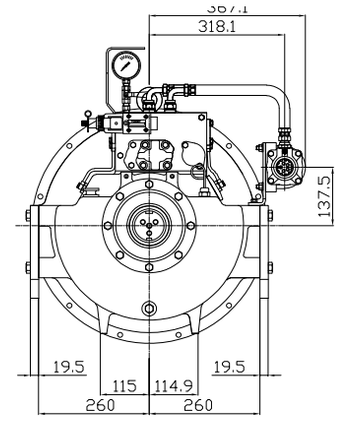

[Engine flywheel housing mounting type]

[Engine pulley mounting type]

mm

INPUT TYPE	OUTPUT TYPE	A	B	C	D	E	F	G	H	I
PULLEY	S	123	399	654	76	253	671	-	-	-
PULLEY	P	123	399	560	76	253	671	-	-	-
SAE1-14"	S	132	281	537	23	253	671	466	511	25
SAE1-14"	P	132	281	442	23	253	671	466	511	25
SAE2-11.5"	S	118	267	522	23	253	671	352	447	39
SAE2-11.5"	P	118	267	428	23	253	671	352	447	39

DPO210/310 Order Code Configuration

※ An The example for DPO 210/310 (F) Ratio 1:1,
Input : engine pulley mounting ,Output : Shaft type

DPO- F 210/310 S 1:1 S

- **S** — Engine mounting Type
  Pulley: S
  Flywheel Housing :
  1-14", 2-11.5", 3-11.5"
- **1:1** — Ratio 1:1
- **S** — Output type
  S, P *Refer to page 14
- **210/310** — Model
  087, 160, 167, 210, 310, 410
- **F** — Input Rotation Direction
  F, R *Refer to right picture
- **DPO-** — Dong-I PTO

Rotation Direction Type

Engine direction(Pulley or Flywheel)

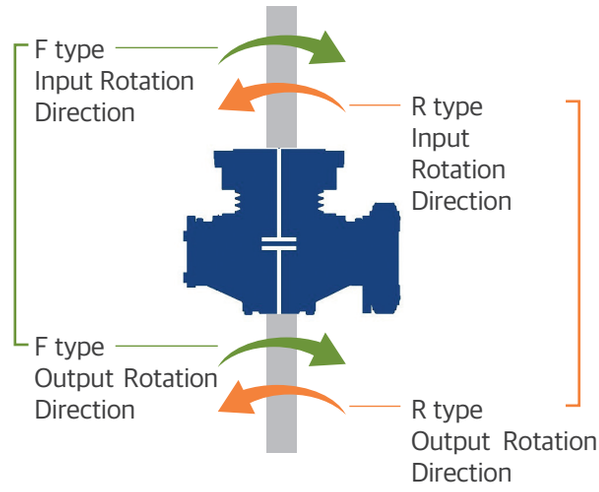

DPO210/310 Order Code Selection Table

DPO210

No	Rotation Type	Output Type	Ratio	Engine mounting Type	Order Code	Output Shape
1	F	S	1:1	Pulley	DPO-F210 S 1:1 S	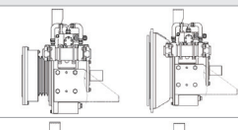
2				1-14"	DPO-F210 S 1:1 1-14"	
3				2-11.5"	DPO-F210 S 1:1 2-11.5"	
4		P	1:1	Pulley	DPO-F210 P 1:1 S	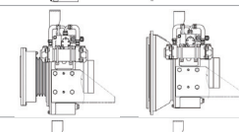
5				1-14"	DPO-F210 P 1:1 1-14"	
6				2-11.5"	DPO-F210 P 1:1 2-11.5"	
7	R	S	1:1	Pulley	DPO-R210 S 1:1 S	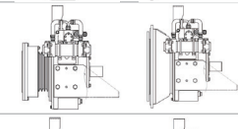
8				1-14"	DPO-R210 S 1:1 1-14"	
9				2-11.5"	DPO-R210 S 1:1 2-11.5"	
10		P	1:1	Pulley	DPO-R210 P 1:1 S	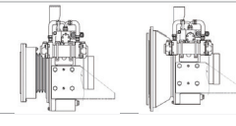
11				1-14"	DPO-R210 P 1:1 1-14"	
12				2-11.5"	DPO-R210 P 1:1 2-11.5"	

DPO310

No	Rotation Type	Output Type	Ratio	Engine mounting Type	Order Code	Output Shape
1	F	S	1:1	Pulley	DPO-F310 S 1:1 S	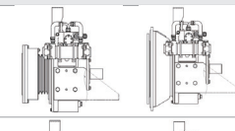
2				1-14"	DPO-F310 S 1:1 1-14"	
3				2-11.5"	DPO-F310 S 1:1 2-11.5"	
4		P	1:1	Pulley	DPO-F310 P 1:1 S	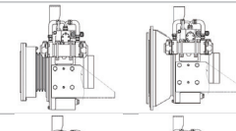
5				1-14"	DPO-F310 P 1:1 1-14"	
6				2-11.5"	DPO-F310 P 1:1 2-11.5"	
7	R	S	1:1	Pulley	DPO-R310 S 1:1 S	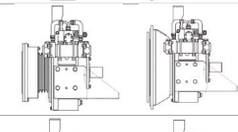
8				1-14"	DPO-R310 S 1:1 1-14"	
9				2-11.5"	DPO-R310 S 1:1 2-11.5"	
10		P	1:1	Pulley	DPO-R310 P 1:1 S	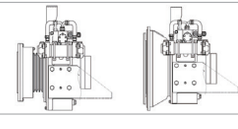
11				1-14"	DPO-R310 P 1:1 1-14"	
12				2-11.5"	DPO-R310 P 1:1 2-11.5"	

DPO210/310 Dimensions Of Pump Mounting Kit

pump plate, pinion coupling

※ When ordering DPO210/310 pump mounting type(P type), refer to the following and order the suitable pump mounting kit for the pump which will be installed to the PTO.

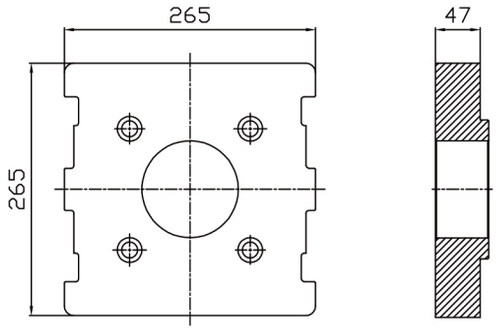

[Not machined pump plate]

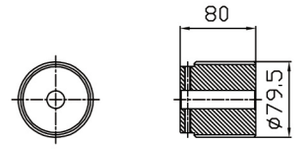

[Not machined pinion coupling]

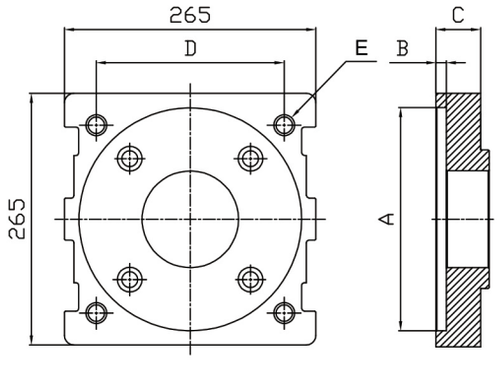

[Machined pump plate]

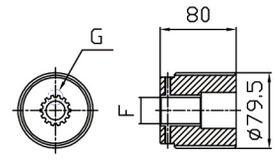

[Machined pinion coupling]

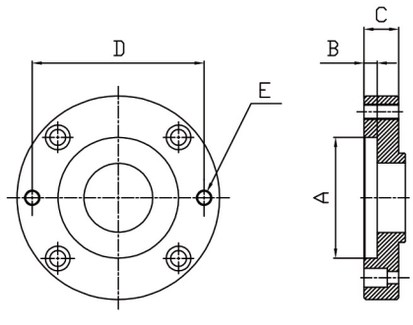

[Machined pump plate]

mm

Part Number	A	B	C	D	E	F	G	H	No. Of Teeth	Remarks
AS_T310615	-	-	-	-	-	-	-		-	Not machined
AS_T310621	Ø127.03	16	47	181	2-M16P2.0	27.6	DP 12/24	-	14	

※ If the dimensions of pump you would like to use with DPO210/310 are not listed in the table above, please order AS_T310615 (Not machined pump mounting kit) and machine it according to the specifications of the pump.

DPO 167

2 ~ 4 Outputs

DPO 167 can be mounted to the engine pulley or flywheel housing and has 2 output shafts(only for pump mounting) each to be driven an independent clutch.
It is possible to extend the output shaft up to 4 by installing a separate gearbox.

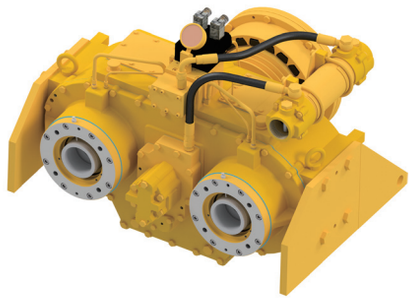

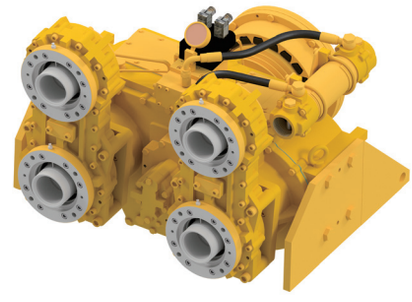

Model	Ratio	Max Input RPM	Input Capacity		No. of Clutch	No. Of Output Shaft	Output Torque (kgf.m) (L/R)	Max Output RPM	Weight (kg)	Engine mounting Type
			HP	kW						
DPO167	0.6603	1981	872	650	2 Clutches (Left / Right)	2 ~ 4	160/160	3000	380	SAE#1, 2 PULLEY
	0.7255	2177	959	715				3000	380	
	0.8333	2500	1101	821				3000	382	
	0.9556	2867	1263	942				3000	384	
	1.3784	3000	1322	985				2176	392	
	1.5143	3000	1322	985				1981	394	

※ When ordering a new PTO, refer to pages 34 to 35 and order the control box or control panel separately.

Output Types

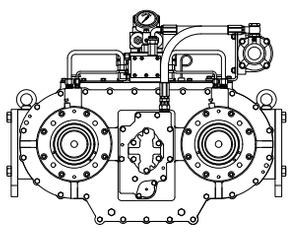

A type
2 outputs for
pump mounting

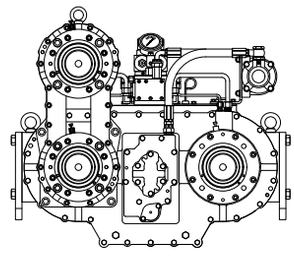

B type
3 outputs(left side) for
pump mounting

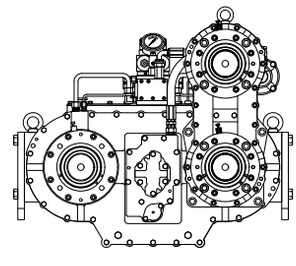

C type
3 outputs(right side) for
pump mounting

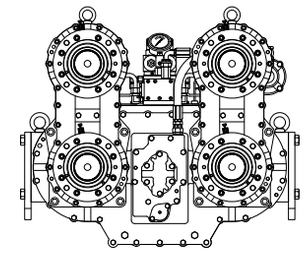

D type
4 outputs for
pump mounting

DPO167 Dimensions

※ When ordering DPO167, please refer to the page 17 and order the pump mounting kit separately.

2 outputs

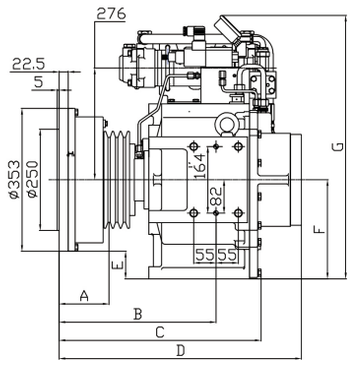

3 ~ 4 outputs

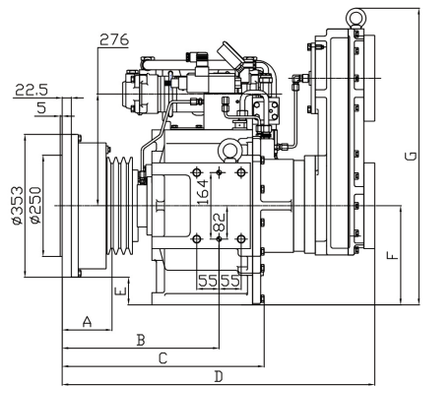

4 outputs

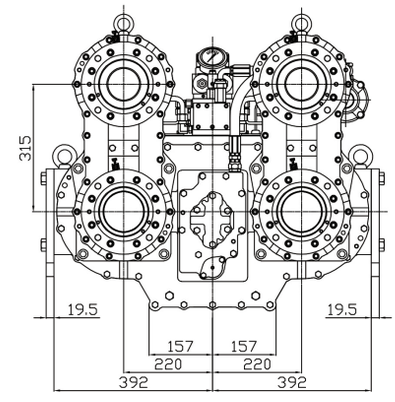

[Engine flywheel housing mounting type]

2 outputs

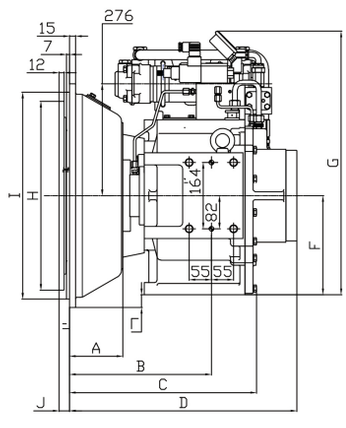

3 ~ 4 outputs

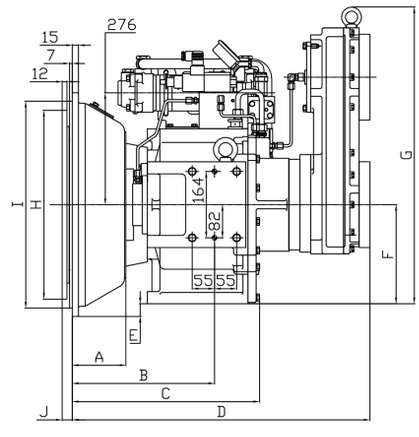

4 outputs

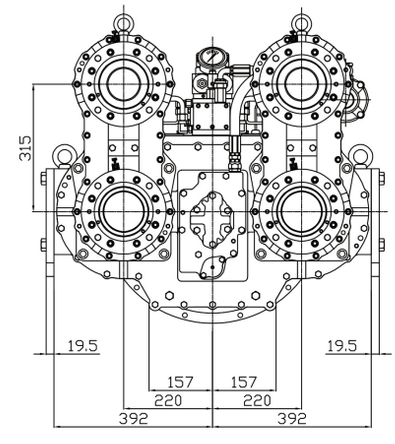

[Engine pulley mounting type]

mm

INPUT TYPE	OUTPUT TYPE	A	B	C	D	E	F	G	H	I	J
PULLEY	A	123	387	499	598	68	244	650	-	-	-
PULLEY	B, C, D	123	387	499	772	68	244	732	-	-	-
SAE1-14"	A	132	350	462	562	31	244	650	466	511	25
SAE1-14"	B, C, D	132	350	462	735	31	244	732	466	511	25
SAE2-11.5"	A	118	336	448	548	0	244	650	352	447	39
SAE2-11.5"	B, C, D	118	336	448	721	0	244	732	352	447	39

DPO167 Order Code Configuration

※ An The example for DPO 167 (F) Ratio 0.66:1,
Input : engine pulley mounting
Output : 2 outputs (A type)

DPO- F 167 A 0.66:1 S

- **S** — Engine mounting Type
  Pulley: S
  Flywheel Housing :
  1-14", 2-11.5"
- **0.66:1** — Ratio
  0.66:1, 0.72:1, 0.83:1
  0.95:1, 1.37:1, 1.51:1
- **A** — Output Type
  A, B, C, D
  *Refer to page 18
- **167** — Model
  087, 160, 167, 210, 310, 410
- **F** — Input Rotation Direction
  F, R *Refer to right picture
- **DPO-** — Dong-I PTO

Rotation Direction Type

Engine Direction(Pulley or Flywheel)

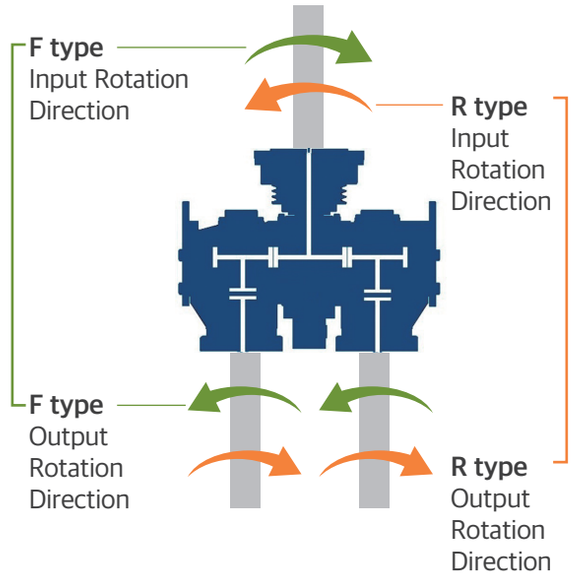

DPO167 Order Code Selection Table

No	Rotation Type	Output Type	Ratio	Engine mounting Type	Order Code	Output Shape
1	F	A	0.66:1	Pulley	DPO-F167 A 0.66:1 S	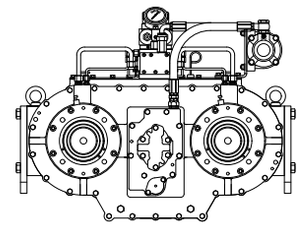 2 outputs
2				1-14"	DPO-F167 A 0.66:1 1-14"	
3				2-11.5"	DPO-F167 A 0.66:1 2-11.5"	
4			0.72:1	Pulley	DPO-F167 A 0.72:1 S	
5				1-14"	DPO-F167 A 0.72:1 1-14"	
6				2-11.5"	DPO-F167 A 0.72:1 2-11.5"	
7			0.83:1	Pulley	DPO-F167 A 0.83:1 S	
8				1-14"	DPO-F167 A 0.83:1 1-14"	
9				2-11.5"	DPO-F167 A 0.83:1 2-11.5"	
10			0.95:1	Pulley	DPO-F167 A 0.95:1 S	
11				1-14"	DPO-F167 A 0.95:1 1-14"	
12				2-11.5"	DPO-F167 A 0.95:1 2-11.5"	
13			1.37:1	Pulley	DPO-F167 A 1.37:1 S	
14				1-14"	DPO-F167 A 1.37:1 1-14"	
15				2-11.5"	DPO-F167 A 1.37:1 2-11.5"	
16			1.51:1	Pulley	DPO-F167 A 1.51:1 S	
17				1-14"	DPO-F167 A 1.51:1 1-14"	
18				2-11.5"	DPO-F167 A 1.51:1 2-11.5"	

DPO167 Order Code Selection Table

No	Rotation Type	Output Type	Ratio	Engine mounting Type	Order Code	Output Shape
19	F	B	0.66:1	Pulley	DPO-F167 B 0.66:1 S	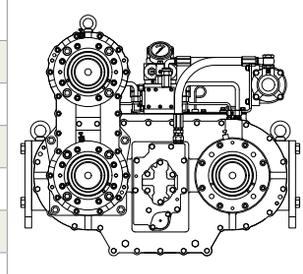 3 outputs (Left additional gearbox)
20				1-14"	DPO-F167 B 0.66:1 1-14"	
21				2-11.5"	DPO-F167 B 0.66:1 2-11.5"	
22			0.72:1	Pulley	DPO-F167 B 0.72:1 S	
23				1-14"	DPO-F167 B 0.72:1 1-14"	
24				2-11.5"	DPO-F167 B 0.72:1 2-11.5"	
25			0.83:1	Pulley	DPO-F167 B 0.83:1 S	
26				1-14"	DPO-F167 B 0.83:1 1-14"	
27				2-11.5"	DPO-F167 B 0.83:1 2-11.5"	
28			0.95:1	Pulley	DPO-F167 B 0.95:1 S	
29				1-14"	DPO-F167 B 0.95:1 1-14"	
30				2-11.5"	DPO-F167 B 0.95:1 2-11.5"	
31			1.37:1	Pulley	DPO-F167 B 1.37:1 S	
32				1-14"	DPO-F167 B 1.37:1 1-14"	
33				2-11.5"	DPO-F167 B 1.37:1 2-11.5"	
34			1.51:1	Pulley	DPO-F167 B 1.51:1 S	
35				1-14"	DPO-F167 B 1.51:1 1-14"	
36				2-11.5"	DPO-F167 B 1.51:1 2-11.5"	
37	F	C	0.66:1	Pulley	DPO-F167 C 0.66:1 S	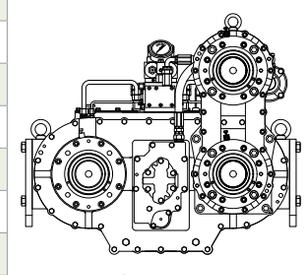 3 outputs (Right additional gearbox)
38				1-14"	DPO-F167 C 0.66:1 1-14"	
39				2-11.5"	DPO-F167 C 0.66:1 2-11.5"	
40			0.72:1	Pulley	DPO-F167 C 0.72:1 S	
41				1-14"	DPO-F167 C 0.72:1 1-14"	
42				2-11.5"	DPO-F167 C 0.72:1 2-11.5"	
43			0.83:1	Pulley	DPO-F167 C 0.83:1 S	
44				1-14"	DPO-F167 C 0.83:1 1-14"	
45				2-11.5"	DPO-F167 C 0.83:1 2-11.5"	
46			0.95:1	Pulley	DPO-F167 C 0.95:1 S	
47				1-14"	DPO-F167 C 0.95:1 1-14"	
48				2-11.5"	DPO-F167 C 0.95:1 2-11.5"	
49			1.37:1	Pulley	DPO-F167 C 1.37:1 S	
50				1-14"	DPO-F167 C 1.37:1 1-14"	
51				2-11.5"	DPO-F167 C 1.37:1 2-11.5"	
52			1.51:1	Pulley	DPO-F167 C 1.51:1 S	
53				1-14"	DPO-F167 C 1.51:1 1-14"	
54				2-11.5"	DPO-F167 C 1.51:1 2-11.5"	

DPO167 Order Code Selection Table

No	Rotation Type	Output Type	Ratio	Engine mounting Type	Order Code	Output Shape
55	F	D	0.66:1	Pulley	DPO-F167 D 0.66:1 S	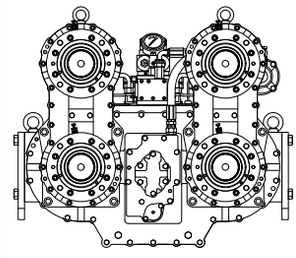 4 outputs (additional gearbox)
56				1-14"	DPO-F167 D 0.66:1 1-14"	
57				2-11.5″	DPO-F167 D 0.66:1 2-11.5"	
58			0.72:1	Pulley	DPO-F167 D 0.72:1 S	
59				1-14″	DPO-F167 D 0.72:1 1-14"	
60				2-11.5"	DPO-F167 D 0.72:1 2-11.5"	
61			0.83:1	Pulley	DPO-F167 D 0.83:1 S	
62				1-14"	DPO-F167 D 0.83:1 1-14"	
63				2-11.5"	DPO-F167 D 0.83:1 2-11.5"	
64			0.95:1	Pulley	DPO-F167 D 0.95:1 S	
65				1-14"	DPO-F167 D 0.95:1 1-14"	
66				2-11.5"	DPO-F167 D 0.95:1 2-11.5"	
67			1.37:1	Pulley	DPO-F167 D 1.37:1 S	
68				1-14"	DPO-F167 D 1.37:1 1-14"	
69				2-11.5"	DPO-F167 D 1.37:1 2-11.5"	
70			1.51:1	Pulley	DPO-F167 D 1.51:1 S	
71				1-14"	DPO-F167 D 1.51:1 1-14"	
72				2-11.5"	DPO-F167 D 1.51:1 2-11.5"	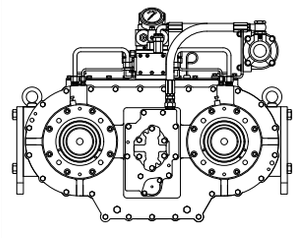 2 outputs
73	R	A	0.66:1	Pulley	DPO-R167 A 0.66:1 S	
74				1-14"	DPO-R167 A 0.66:1 1-14"	
75				2-11.5"	DPO-R167 A 0.66:1 2-11.5"	
76			0.72:1	Pulley	DPO-R167 A 0.72:1 S	
77				1-14"	DPO-R167 A 0.72:1 1-14"	
78				2-11.5"	DPO-R167 A 0.72:1 2-11.5"	
79			0.83:1	Pulley	DPO-R167 A 0.83:1 S	
80				1-14"	DPO-R167 A 0.83:1 1-14"	
81				2-11.5"	DPO-R167 A 0.83:1 2-11.5"	
82			0.95:1	Pulley	DPO-R167 A 0.95:1 S	
83				1-14"	DPO-R167 A 0.95:1 1-14"	
84				2-11.5"	DPO-R167 A 0.95:1 2-11.5"	
85			1.37:1	Pulley	DPO-R167 A 1.37:1 S	
86				1-14"	DPO-R167 A 1.37:1 1-14"	
87				2-11.5"	DPO-R167 A 1.37:1 2-11.5"	
88			1.51:1	Pulley	DPO-R167 A 1.51:1 S	
89				1-14"	DPO-R167 A 1.51:1 1-14"	
90				2-11.5"	DPO-R167 A 1.51:1 2-11.5"	

DPO167 Order Code Selection Table

No	Rotation Type	Output Type	Ratio	Engine mounting Type	Order Code	Output Shape
91	R	B	0.66:1	Pulley	DPO-R167 B 0.66:1 S	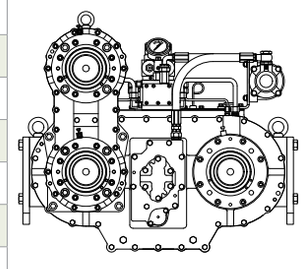 3 outputs (Left additional gearbox)
92				1-14"	DPO-R167 B 0.66:1 1-14"	
93				2-11.5"	DPO-R167 B 0.66:1 2-11.5"	
94			0.72:1	Pulley	DPO-R167 B 0.72:1 S	
95				1-14"	DPO-R167 B 0.72:1 1-14"	
96				2-11.5"	DPO-R167 B 0.72:1 2-11.5"	
97			0.83:1	Pulley	DPO-R167 B 0.83:1 S	
98				1-14"	DPO-R167 B 0.83:1 1-14"	
99				2-11.5"	DPO-R167 B 0.83:1 2-11.5"	
100			0.95:1	Pulley	DPO-R167 B 0.95:1 S	
101				1-14"	DPO-R167 B 0.95:1 1-14"	
102				2-11.5"	DPO-R167 B 0.95:1 2-11.5"	
103			1.37:1	Pulley	DPO-R167 B 1.37:1 S	
104				1-14"	DPO-R167 B 1.37:1 1-14"	
105				2-11.5"	DPO-R167 B 1.37:1 2-11.5"	
106			1.51:1	Pulley	DPO-R167 B 1.51:1 S	
107				1-14"	DPO-R167 B 1.51:1 1-14"	
108				2-11.5"	DPO-R167 B 1.51:1 2-11.5"	
109	R	C	0.66:1	Pulley	DPO-R167 C 0.66:1 S	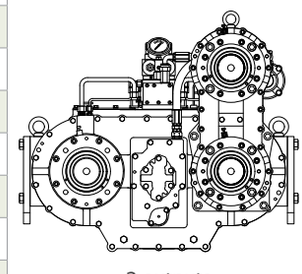 3 outputs (Right additional gearbox)
110				1-14"	DPO-R167 C 0.66:1 1-14"	
111				2-11.5"	DPO-R167 C 0.66:1 2-11.5"	
112			0.72:1	Pulley	DPO-R167 C 0.72:1 S	
113				1-14"	DPO-R167 C 0.72:1 1-14"	
114				2-11.5"	DPO-R167 C 0.72:1 2-11.5"	
115			0.83:1	Pulley	DPO-R167 C 0.83:1 S	
116				1-14"	DPO-R167 C 0.83:1 1-14"	
117				2-11.5"	DPO-R167 C 0.83:1 2-11.5"	
118			0.95:1	Pulley	DPO-R167 C 0.95:1 S	
119				1-14"	DPO-R167 C 0.95:1 1-14"	
120				2-11.5"	DPO-R167 C 0.95:1 2-11.5"	
121			1.37:1	Pulley	DPO-R167 C 1.37:1 S	
122				1-14"	DPO-R167 C 1.37:1 1-14"	
123				2-11.5"	DPO-R167 C 1.37:1 2-11.5"	
124			1.51:1	Pulley	DPO-R167 C 1.51:1 S	
125				1-14"	DPO-R167 C 1.51:1 1-14"	
126				2-11.5"	DPO-R167 C 1.51:1 2-11.5"	

DPO167 Order Code Selection Table

No	Rotation Type	Output Type	Ratio	Engine mounting Type	Order Code	Output Shape
127	R	D	0.66:1	Pulley	DPO-R167 D 0.66:1 S	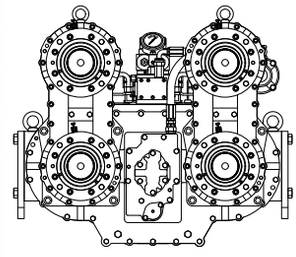 4 outputs (additional gearbox)
128				1-14"	DPO-R167 D 0.66:1 1-14"	
129				2-11.5"	DPO-R167 D 0.66:1 2-11.5"	
130			0.72:1	Pulley	DPO-R167 D 0.72:1 S	
131				1-14"	DPO-R167 D 0.72:1 1-14"	
132				2-11.5"	DPO-R167 D 0.72:1 2-11.5"	
133			0.83:1	Pulley	DPO-R167 D 0.83:1 S	
134				1-14"	DPO-R167 D 0.83:1 1-14"	
135				2-11.5"	DPO-R167 D 0.83:1 2-11.5"	
136			0.95:1	Pulley	DPO-R167 D 0.95:1 S	
137				1-14"	DPO-R167 D 0.95:1 1-14"	
138				2-11.5"	DPO-R167 D 0.95:1 2-11.5"	
139			1.37:1	Pulley	DPO-R167 D 1.37:1 S	
140				1-14"	DPO-R167 D 1.37:1 1-14"	
141				2-11.5"	DPO-R167 D 1.37:1 2-11.5"	
142			1.51:1	Pulley	DPO-R167 D 1.51:1 S	
143				1-14"	DPO-R167 D 1.51:1 1-14"	
144				2-11.5"	DPO-R167 D 1.51:1 2-11.5"	

DPO167, 410 Dimensions Of Pump Mounting Kit

pump plate, pinion coupling

※ When ordering DPO167, 410, please refer to the following and order the suitable pump mounting kit for the pump which will be installed to the PTO.

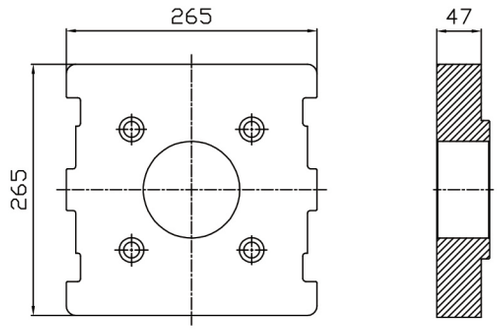

[Not machined pump plate]

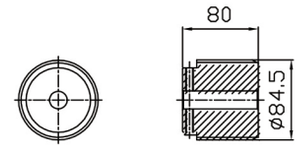

[Not machined pinion coupling]

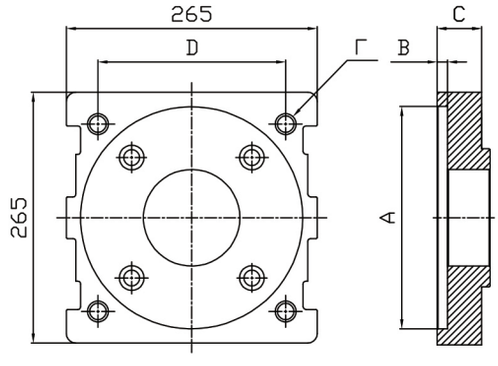

[Machined pump plate]

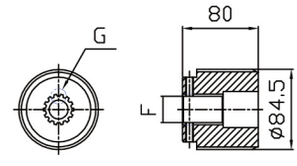

[Machined pinion coupling]

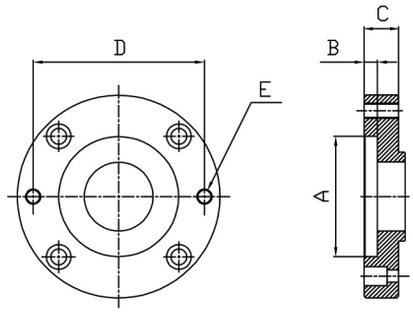

[Machined pump plate]

mm

Part Number	A	B	C	D	E	F	G	H	No. Of Teeth	Remarks
AS_T410615_002	-	-	-	-	-	-	-	-	-	Not machined
AS_T410621_004	Ø127.03	16	47	181	2-M16P2.0	27.6	DP 12/24	-	14	
AS_T410622	Ø101.65	23	35.2	146	2-M12P1.75	19	DP 16/32	-	13	
AS_T410655_001	Ø127.03	9	39	162	4-M14P2.0	27.6	DP 12/24	-	14	
AS_T410657	Ø180.05	9	56	216.5	4-M20P2.5	42.5	M2.5	-	17	

※ If the dimensions of pump you would like to use with DPO167, 410 are not listed in the table above, please order AS_T410615_002 (Not machined pump mounting kit) and machine it according to the specifications of the pump.

DPO 410

2 ~ 4 Outputs

DPO 410 can be mounted to the engine pulley or flywheel housing and has 2 output shafts(only for pump mounting) to be driven by 1 clutch.
It is possible to extend the output shaft up to 4 by installing a separate gearbox.

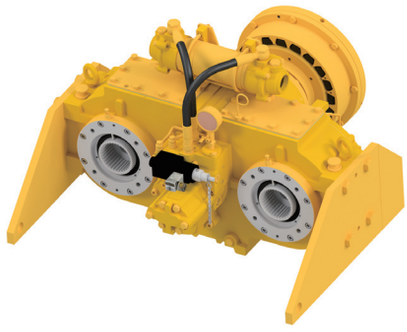

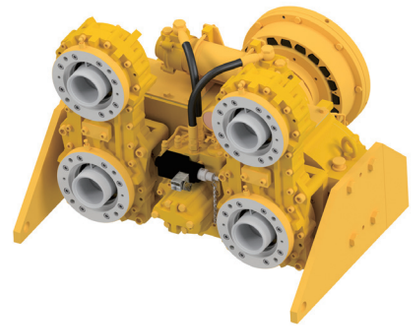

Model	Ratio	Max Input RPM	Input Capacity		No. of Clutch	No. Of Output Shaft	Output Torque (kgf.m) (L/R)	Max Output RPM	Weight (kg)	Engine mounting Type
			HP	kW						
DPO410	0.6607	1784	982	732	1 Clutch	2 ~ 4	400/0 200/200 0/400	2700	371	SAE#1, 2 PULLEY
	0.7692	2077	1144	853				2700	369	
	0.86	2322	1279	953				2700	369	
	0.9787	2642	1455	1085				2700	373	

※ When ordering a new PTO, refer to pages 34 to 35 and order the control box or control panel separately.

Output Types

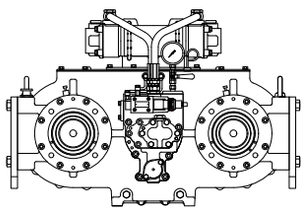

A type
2 outputs for
pump mounting

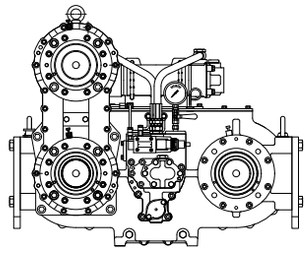

B type
3 outputs(left side) for
pump mounting

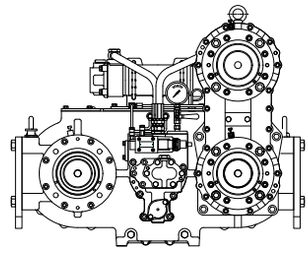

C type
3 outputs(right side) for
pump mounting

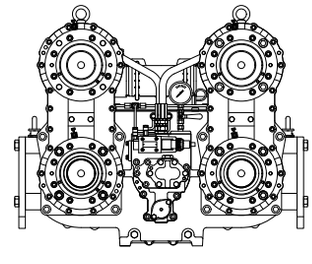

D type
4 outputs for
pump mounting

DPO410 Dimensions

※ When ordering DPO167, please refer to the page 17 and order the pump mounting kit separately.

2 outputs

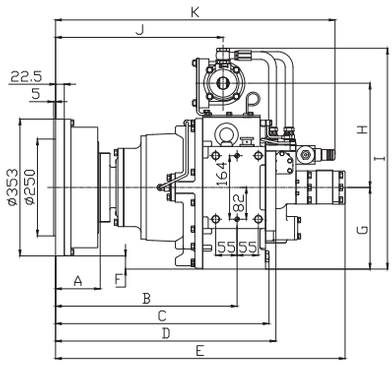

3 ~ 4 outputs

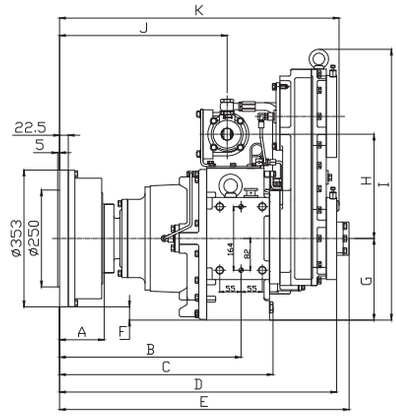

4 outputs

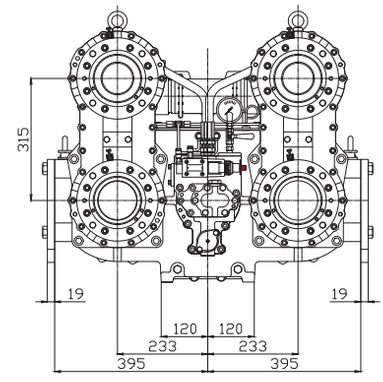

[Engine flywheel housing mounting type]

2 outputs

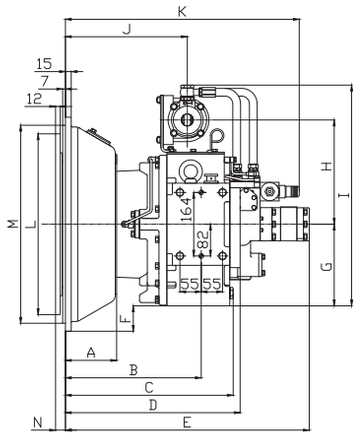

3 ~ 4 outputs

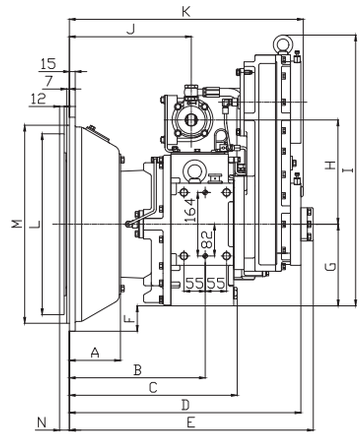

4 outputs

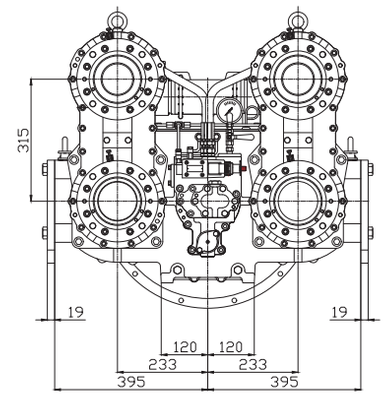

[Engine pulley mounting type]

mm

INPUT TYPE	OUTPUT TYPE	A	B	C	D	E	F	G	H	I	J	K	L	M	N
PULLEY	A	115	468	550	568	747	34	210	269	569	432	721	-	-	-
PULLEY	B, C, D	115	468	550	715	747	34	210	269	699	432	721	-	-	-
SAE1-14"	A	132	350	433	450	629	65	210	269	569	314	603	466	511	25
SAE1-14"	B, C, D	132	350	433	597	629	65	210	269	699	314	603	466	511	25
SAE2-11.5"	A	118	336	418	436	615	33	210	269	569	300	589	352	447	39
SAE2-11.5"	B, C, D	118	336	418	583	615	33	210	269	699	300	589	352	447	39

DPO410 Order Code Configuration | Rotation Direction Type

※ An The example for DPO 167 (F) Ratio 0.66:1,
Input : engine pulley mounting
Output : 2 outputs (A type)

DPO- F 410 A 0.66:1 S

- **S** — Engine mounting Type
  Pulley: S
  Flywheel Housing :
  1-14", 2-11.5"
- **0.66:1** — Ratio
  0.66:1, 0.76:1, 0.86:1, 0.97:1
- **A** — Output Type
  A, B, C, D
  *Refer to page 26
- **410** — Model
  087, 160, 167, 210, 310, 410
- **F** — Input Rotation Direction
  F, R *Refer to right picture
- **DPO-** — Dong-I PTO

Engine Direction(Pulley or Flywheel)

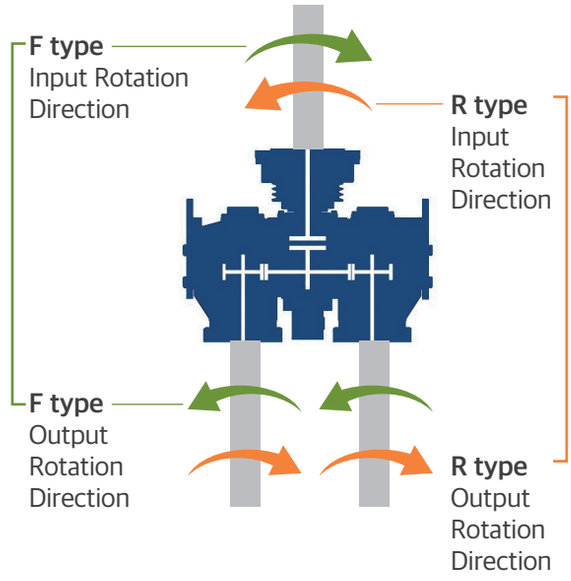

DPO410 Order Code Selection Table

No	Rotation Type	Output Type	Ratio	Engine mounting Type	Order Code	Output Shape
1	F	A	0.66:1	Pulley	DPO-F410 A 0.66:1 S	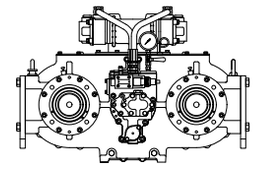 2 outputs
2				1-14"	DPO-F410 A 0.66:1 1-14"	
3				2-11.5"	DPO-F410 A 0.66:1 2-11.5"	
4			0.76:1	Pulley	DPO-F410 A 0.76:1 S	
5				1-14"	DPO-F410 A 0.76:1 1-14"	
6				2-11.5"	DPO-F410 A 0.76:1 2-11.5"	
7			0.86:1	Pulley	DPO-F410 A 0.86:1 S	
8				1-14"	DPO-F410 A 0.86:1 1-14"	
9				2-11.5"	DPO-F410 A 0.86:1 2-11.5"	
10			0.97:1	Pulley	DPO-F410 A 0.97:1 S	
11				1-14"	DPO-F410 A 0.97:1 1-14"	
12				2-11.5"	DPO-F410 A 0.97:1 2-11.5"	
13	F	B	0.66:1	Pulley	DPO-F410 B 0.66:1 S	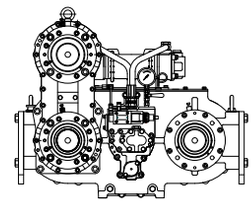 3 outputs (Left additional gearbox)
14				1-14"	DPO-F410 B 0.66:1 1-14"	
15				2-11.5"	DPO-F410 B 0.66:1 2-11.5"	
16			0.76:1	Pulley	DPO-F410 B 0.76:1 S	
17				1-14"	DPO-F410 B 0.76:1 1-14"	
18				2-11.5"	DPO-F410 B 0.76:1 2-11.5"	
19			0.86:1	Pulley	DPO-F410 B 0.86:1 S	
20				1-14"	DPO-F410 B 0.86:1 1-14"	
21				2-11.5"	DPO-F410 B 0.86:1 2-11.5"	
22			0.97:1	Pulley	DPO-F410 B 0.97:1 S	
23				1-14"	DPO-F410 B 0.97:1 1-14"	
24				2-11.5"	DPO-F410 B 0.97:1 2-11.5"	

DPO410 Order Code Selection Table

No	Rotation Type	Output Type	Ratio	Engine mounting Type	Order Code	Output Shape
25	F	C	0.66:1	Pulley	DPO-F410 C 0.66:1 S	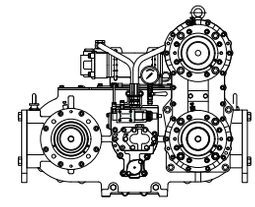 3 outputs (Right additional gearbox)
26				1-14"	DPO-F410 C 0.66:1 1-14"	
27				2-11.5"	DPO-F410 C 0.66:1 2-11.5"	
28			0.76:1	Pulley	DPO-F410 C 0.76:1 S	
29				1-14"	DPO-F410 C 0.76:1 1-14"	
30				2-11.5"	DPO-F410 C 0.76:1 2-11.5"	
31			0.86:1	Pulley	DPO-F410 C 0.86:1 S	
32				1-14"	DPO-F410 C 0.86:1 1-14"	
33				2-11.5"	DPO-F410 C 0.86:1 2-11.5"	
34			0.97:1	Pulley	DPO-F410 C 0.97:1 S	
35				1-14"	DPO-F410 C 0.97:1 1-14"	
36				2-11.5"	DPO-F410 C 0.97:1 2-11.5"	
37	F	D	0.66:1	Pulley	DPO-F410 D 0.66:1 S	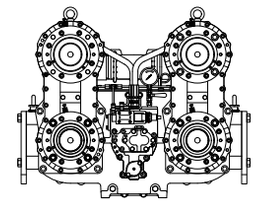 4 outputs (additional gearbox)
38				1-14"	DPO-F410 D 0.66:1 1-14"	
39				2-11.5"	DPO-F410 D 0.66:1 2-11.5"	
40			0.76:1	Pulley	DPO-F410 D 0.76:1 S	
41				1-14"	DPO-F410 D 0.76:1 1-14"	
42				2-11.5"	DPO-F410 D 0.76:1 2-11.5"	
43			0.86:1	Pulley	DPO-F410 D 0.86:1 S	
44				1-14"	DPO-F410 D 0.86:1 1-14"	
45				2-11.5"	DPO-F410 D 0.86:1 2-11.5"	
46			0.97:1	Pulley	DPO-F410 D 0.97:1 S	
47				1-14"	DPO-F410 D 0.97:1 1-14"	
48				2-11.5"	DPO-F410 D 0.97:1 2-11.5"	
49	R	A	0.66:1	Pulley	DPO-R410 A 0.66:1 S	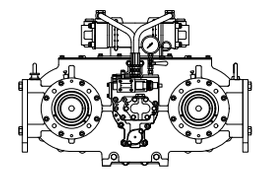 2 outputs
50				1-14"	DPO-R410 A 0.66:1 1-14"	
51				2-11.5"	DPO-R410 A 0.66:1 2-11.5"	
52			0.76:1	Pulley	DPO-R410 A 0.76:1 S	
53				1-14"	DPO-R410 A 0.76:1 1-14"	
54				2-11.5"	DPO-R410 A 0.76:1 2-11.5"	
55			0.86:1	Pulley	DPO-R410 A 0.86:1 S	
56				1-14"	DPO-R410 A 0.86:1 1-14"	
57				2-11.5"	DPO-R410 A 0.86:1 2-11.5"	
58			0.97:1	Pulley	DPO-R410 A 0.97:1 S	
59				1-14"	DPO-R410 A 0.97:1 1-14"	
60				2-11.5"	DPO-R410 A 0.97:1 2-11.5"	
61	R	B	0.66:1	Pulley	DPO-R410 B 0.66:1 S	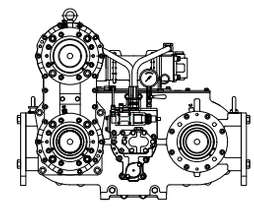 3 outputs (Left additional gearbox)
62				1-14"	DPO-R410 B 0.66:1 1-14"	
63				2-11.5"	DPO-R410 B 0.66:1 2-11.5"	
64			0.76:1	Pulley	DPO-R410 B 0.76:1 S	
65				1-14"	DPO-R410 B 0.76:1 1-14"	
66				2-11.5"	DPO-R410 B 0.76:1 2-11.5"	
67			0.86:1	Pulley	DPO-R410 B 0.86:1 S	
68				1-14"	DPO-R410 B 0.86:1 1-14"	
69				2-11.5"	DPO-R410 B 0.86:1 2-11.5"	
70			0.97:1	Pulley	DPO-R410 B 0.97:1 S	
71				1-14"	DPO-R410 B 0.97:1 1-14"	
72				2-11.5"	DPO-R410 B 0.97:1 2-11.5"	

DPO410 Order Code Selection Table

No	Rotation Type	Output Type	Ratio	Engine mounting Type	Order Code	Output Shape
73	R	C	0.66:1	Pulley	DPO-R410 C 0.66:1 S	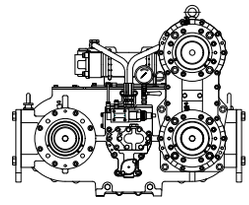 3 outputs (Right additional gearbox)
74				1-14"	DPO-R410 C 0.66:1 1-14"	
75				2-11.5"	DPO-R410 C 0.66:1 2-11.5"	
76			0.76:1	Pulley	DPO-R410 C 0.76:1 S	
77				1-14"	DPO-R410 C 0.76:1 1-14"	
78				2-11.5"	DPO-R410 C 0.76:1 2-11.5"	
79			0.86:1	Pulley	DPO-R410 C 0.86:1 S	
80				1-14"	DPO-R410 C 0.86:1 1-14"	
81				2-11.5"	DPO-R410 C 0.86:1 2-11.5"	
82			0.97:1	Pulley	DPO-R410 C 0.97:1 S	
83				1-14"	DPO-R410 C 0.97:1 1-14"	
84				2-11.5"	DPO-R410 C 0.97:1 2-11.5"	
85	R	D	0.66:1	Pulley	DPO-R410 D 0.66:1 S	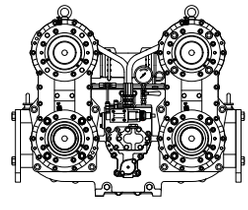 4 outputs (additional gearbox)
86				1-14"	DPO-R410 D 0.66:1 1-14"	
87				2-11.5"	DPO-R410 D 0.66:1 2-11.5"	
88			0.76:1	Pulley	DPO-R410 D 0.76:1 S	
89				1-14"	DPO-R410 D 0.76:1 1-14"	
90				2-11.5"	DPO-R410 D 0.76:1 2-11.5"	
91			0.86:1	Pulley	DPO-R410 D 0.86:1 S	
92				1-14"	DPO-R410 D 0.86:1 1-14"	
93				2-11.5"	DPO-R410 D 0.86:1 2-11.5"	
94			0.97:1	Pulley	DPO-R410 D 0.97:1 S	
95				1-14"	DPO-R410 D 0.97:1 1-14"	
96				2-11.5"	DPO-R410 D 0.97:1 2-11.5"	

DPO410 Dimensions Of Pump Mounting Kit

pump plate, pinion coupling

※ Please refer to the page 25 and order the pump mounting kit separately.

Recommendations for machining the pump plate of PTO

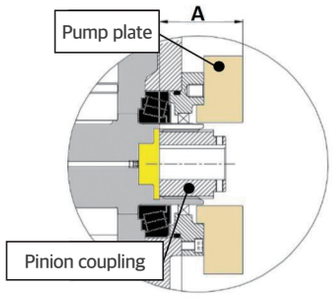

Fig. 1 output shaft (pump mounting type)

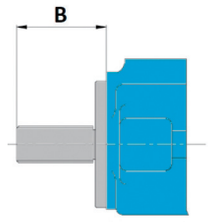

Fig. 2 hydraulic pump

Model	A
DPO - 087	75mm
DPO - 160	94mm
DPO - 210/310	109mm
DPO - 167/410	100mm
DPO167, 410 Additional gearbox	90mm

Caution

In case of installing hydraulic pump on the PTO, if the dimension B shown in Fig. 2 is longer than the dimension A shown in Fig. 1, pump shaft may push PTO shaft, which may cause bearing damaged and fatal malfunction. Be sure to measure the dimension B and **machine the pump plate to let dimension B in Fig. 2 be 5mm shorter than dimension A in Table 1.**

Cautions for assembling the hydraulic pump in/on the PTO

Fig. 3

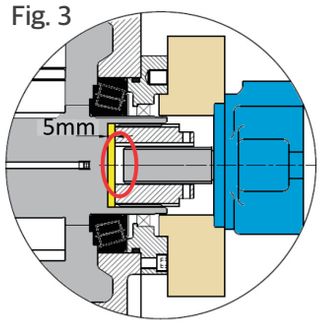

Fig. 4

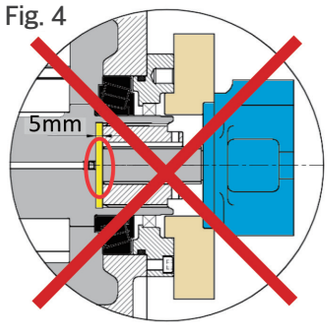

Caution

In case of installing hydraulic pump in the PTO, please machine the pump plate so that the space between the PTO and the pump shaft is secured as shown in Fig. 3. If the PTO output shaft and the pump shaft are assembled close to the pinion coupling end as shown in Fig. 4, the shaft may push the bearing causing the fatal malfunction

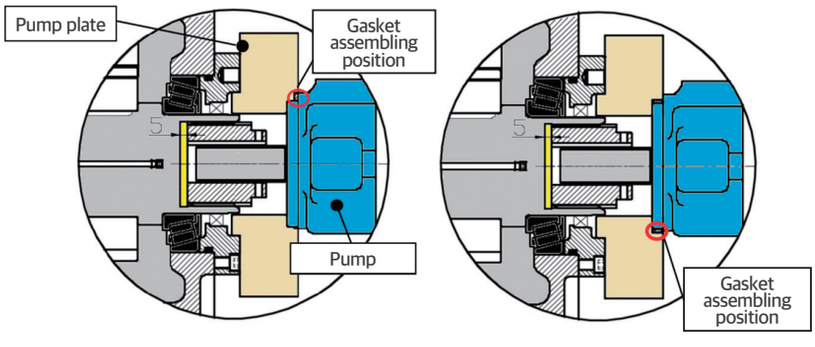

Caution ※Except for DPO 087

In case of assembling the hydraulic pump on the PTO, **be sure to put a gasket or an O-ring between the pump plate and hydraulic pump.** Otherwise, oil leakage can cause bearing seizure (bearing to be jammed) and fatal malfunction.

Hydraulic Vane Pump

No	Part Number	Model	Capacity (cc/rev)	Max Pressure (bar)	Remarks
1	98475570T	HT6CM-012-3R01-M0	37	240	
2	98475580T	HT6CM-014-3R01-M0	46	240	
3	98475590T	HT6CM-017-3R01-M0	58	240	
4	98475600T	HT6CM-020-3R01-M0	64	240	
5	98475610T	HT6CM-022-3R01-M0	70	240	
6	98475620T	HT6CM-025-3R01-M0	79	240	
7	98475630T	HT6CM-028-3R01-M0	89	206	
8	98475640T	HT6CM-031-3R01-M0	100	206	
9	98475200T	HT6DM-042-3R01-M0	136	240	
10	98475210T	HT6DM-045-3R01-M0	145	240	
11	98475410T	HT6EM-050-3R01-M0	158	206	
12	98475420T	HT6EM-054-3R01-M0	171	240	
13	98475430T	HT6EM-062-3R01-M0	196	240	
14	98475440T	HT6EM-072-3R01-M0	227	240	

※ When ordering a pump without flanges, please order by model name.

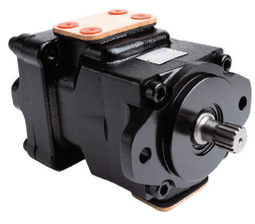

Flanges

Hydraulic Piston Pump

NO	Part Number	Model	Capacity (cc/rev)	Max Pressure (bar)	Remarks
1	98492100G	TBP140S	Piston Pump Group(140cc/rev)	140	
2	98492300G	TBP160S	Piston Pump Group(160cc/rev)	160	
3	98492200G	TBP180S	Piston Pump Group(180cc/rev)	180	
4	98492400G	TBP200S	Piston Pump Group(200cc/rev)	200	

※ When ordering a pump without flanges, please order by model name.

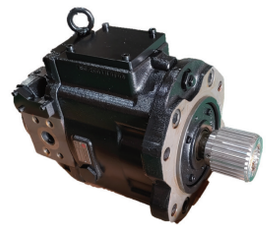

Flanges

Pump size selection table

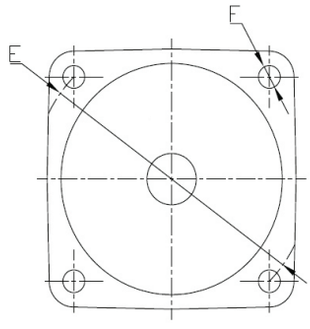

Pump type A

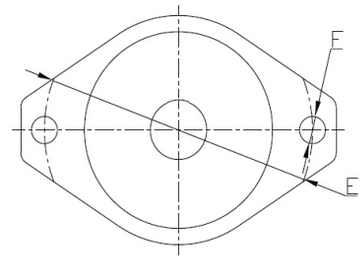

Pump type B

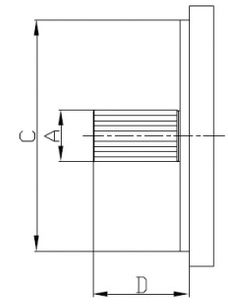

Splined Pump Shaft

Table 1

mm

No	Shaft type	A	C	D	E	F	No. Of Teeth	Pump Model	Pump type
1	Splined	DP16/32 13T	Ø101.6	41.1	41.1	2-Ø14.2	13	20HVQ	B
2		DP16/32 13T	Ø101.6	44.5	44.5	2-Ø14.2	13	25HVQ	B
3		DP16/32 13T;	Ø101.6	40.7	40.7	2-Ø14.2	13	HT6CM	B
4		DP12/24 14T	Ø127	58.7	58.7	2-Ø17.5	14	35HVQ	B
5		DP12/24 14T	Ø127	61.9	61.9	2-Ø17.5	14	45HVQ	B
6		DP12/24 14T	Ø127	55.2	55.2	2-Ø17.5	14	HT6DM, HT6DCM	B
7		DP12/24 14T	Ø127	55.9	55.9	2-Ø17.5	14	HT6EM, HT6ED	B
8		M25 17T	Ø180	93	93	4-Ø22	17	TBP140S, TBP160S, TBP180S, TBP200S	A
9	Not machined pump mounting kit								

※ If there is no pump of the applicable size in the table above, please select not machined pump mounting kit (No. 6) in the Table 2 below.

Pump mounting kit selection table

Table 2

No	Pump Model	Part Number of applicable Pump Mounting Kit by PTO Model				
		DPO087	DPO160	DPO210, 310	DPO167	DPO410
1	20HVQ	AS_T087216B	AS_T160617	-	-	-
2	25HVQ, HT6CM	AS_T087216B	AS_T160617	-	-	AS_T410622
3	35HVQ, 45HVQ	AS_T087216E	AS_T160616	AS_T310621	AS_T410621_004	AS_T410621_004
4	HT6DM, HT6DCM, HT6EM, HT6ED	AS_T087216E	AS_T160616	AS_T310621	AS_T410621_004	AS_T410621_004
5	TBP140S, 160S, 180S, 200S	-	-	-	AS_T410657	AS_T410657
6	Not machined pump mounting kit	AS_T087216	AS_T160615	AS_T310615	AS_T410615_002	AS_T410615_002

※Please Refer to Table 1 above and select the applicable pump model from the Table 2.
Please order a pump mounting kit for your PTO and pump model.

PTO Control Box

Standard Type Control Box

※ When purchasing PTO, refer to the corresponding PTO model in the table below to order.

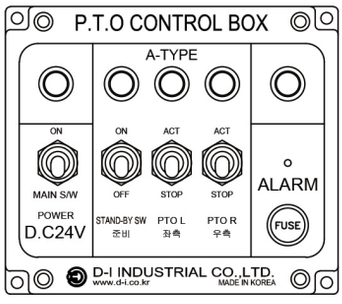

DPO087

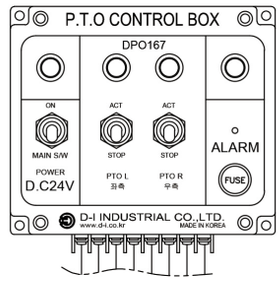

DPO167

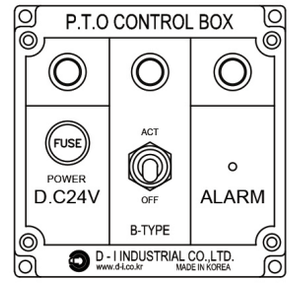

DPO160, 210, 310, 410

No	Part Number	Model	Part Name	Applicable Model	mounting dimensions(mm)		
					L	W	H
1	T087580	T087	CONTROL BOX ASS'Y	DPO087	145	130	85
2	T167580	T167	CONTROL BOX ASS'Y	DPO167	145	130	85
3	T410660	T410	CONTROL BOX ASS'Y	DPO160, 210, 310, 410	110	120	80

Control Panel

DPO160, 210, 310, 410 + Side Thruster Control

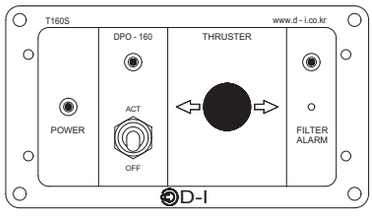

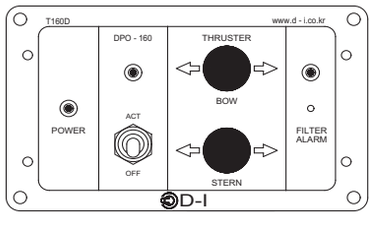

Control panel for DPO160, 210, 310, 410 and side thrusters together

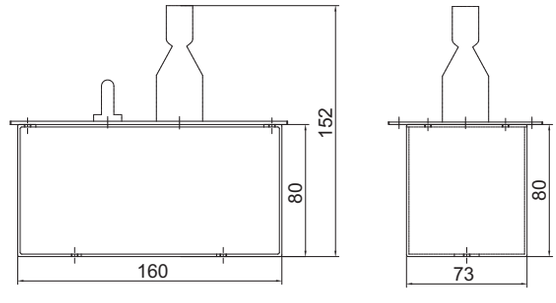

※ When applied to side thrusters, this control panel is only for side thrusters using solenoid valve. It is not applicable to side thrusters using proportional control valve.

Part Number	Model	Applicable Model		Remarks
		PTO	Side Thruster	
T160580	T160S	DPO160, 210, 310, 410	All D-I Model	Control 1 PTO with 1 Side Thruster
T160590	T160D	DPO160, 210, 310, 410	All D-I Model	Control 1 PTO with 1 Side Thruster

Control Panel

DPO 087 + Side Thruster Control

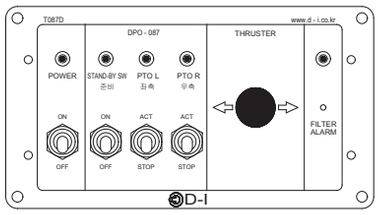

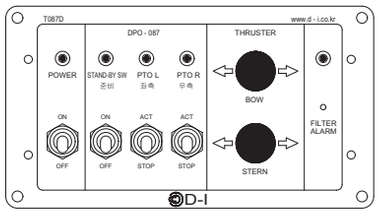

Control panel for DPO 087 and side thrusters together

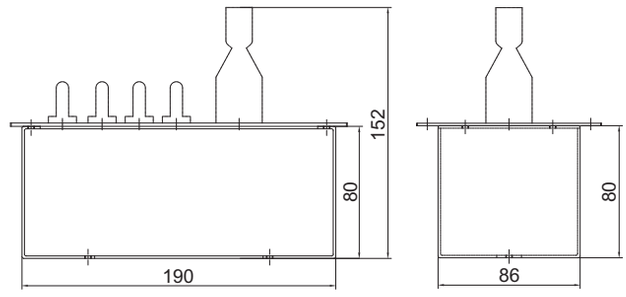

※ When applied to side thrusters, this control panel is only for side thrusters using solenoid valve. It is not applicable to side thrusters using proportional control valve.

Part Number	Model	Applicable Model		Remarks
		PTO	Side Thruster	
T087680	T087S	DPO087	All D-I Model	Control 1 PTO with 1 Side Thruster
T087690	T087D	DPO087	All D-I Model	Control 1 PTO with 2 Side Thruster

Control Panel

DPO167 + Side Thruster Control

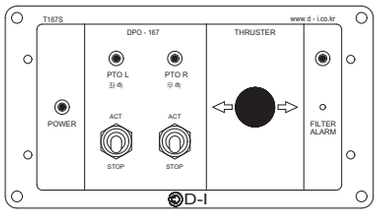

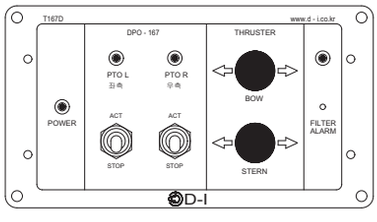

Control panel for DPO167 and side thrusters together

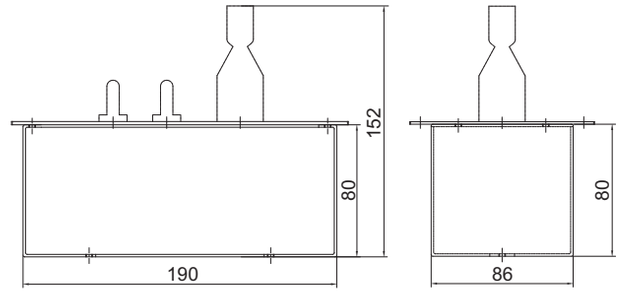

※ When applied to side thrusters, this control panel is only for side thrusters using solenoid valve. It is not applicable to side thrusters using proportional control valve.

Part Number	Model	Applicable Model		Remarks
		PTO	Side Thruster	
T167570	T167S	DPO167	All D-I Model	Control 1 PTO with 1 Side Thruster
T167590	T167D	DPO167	All D-I Model	Control 1 PTO with 2 Side Thruster

Height Adjustment Block

*Applicable to all D-I PTO models

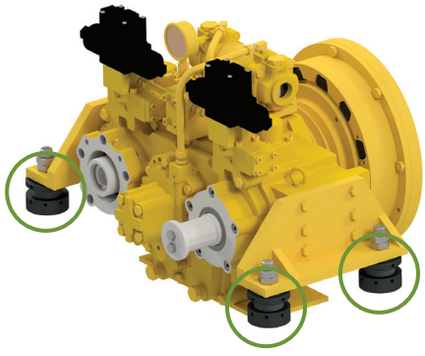

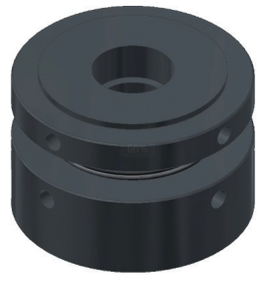

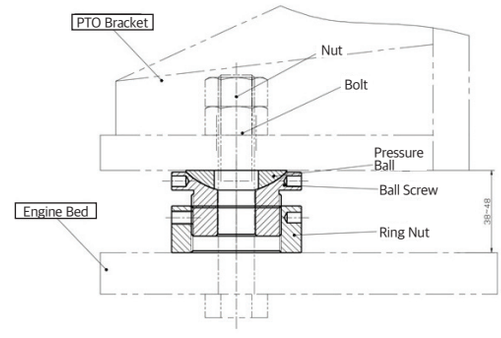

1. The Role Of The Height Adjustment Block

- When installing PTO on a ship, it is a product that can be assembled between the bed and the PTO bracket to fine-tune the mounting height of the PTO. (alignment work)
- The height adjustment block solves the problem of difficult leveling with the curved shape of the pressure ball for errors arising from DPO's bracket error, engine bed manufacturing error, material error, design error, and welding work error. (up to 4°)
- When the height adjustment block is installed, fine adjustment is possible during the alignment operation when installing the PTO, increasing the work efficiency and eliminating the need for additional materials (shim, liner).
- As shown in the figure, the height adjustment block is assembled between the bed and the bracket and the height is adjusted by rotating the ball screw.

2. Advantages and Precautions of Height Adjustment Block

Advantages

a) High alignment work efficiency
b) Height adjustable with little force
c) It is possible to maintain the flatness of the assembly surface
d) High maintainability (when correcting alignment)
e) No need for shim-like parts such as liners

Precautions

a) Existing ships need to rework the height of the bracket.(fix bracket)
b) Tools (jigs, wrenches, etc.) are required for height adjustment

A(inner diameter)

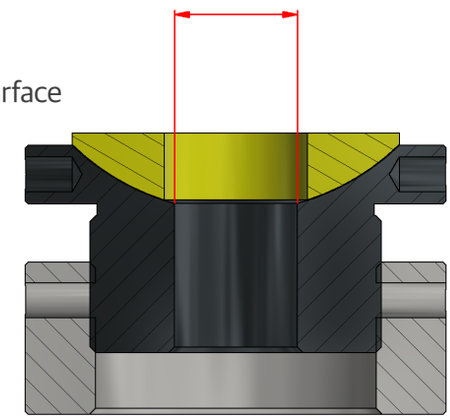

Part Number	Model	Mounting Dimensions	ADimension	A Dimension	Bolt Specification	Adjustable height	Limiting Load	Applicable model
T087810	DCK16	Ø72*39~49	Ø17	Ø17	M16	0~10mm	200 kg/EA	DPO 087/160/210/310
T410810	DCK20	Ø72*39~49	Ø21	Ø21	M20	0~10mm	200 kg/EA	DPO 410/167

Integral shaft supporter

An Integral shaft supporter is a device to transmit engine power, protecting the engine and driving equipment by applying an elastic coupling.

Features

- Directly attached to the engine flywheel housing to transmit power
- Protect the power transmission system with a flexible coupling

Application

- To drive Generator, fire pump, water pump
- Where power transmission is required in remote type such as V-Drive
- Other application where power transmission is required

Model	Ratio	Max Input RPM	Output Capacity /RPM		1800 rpm		2100 rpm		2300 rpm		Weight	Housing (SAE)
			HP	kW	HP	kW	HP	kW	HP	kW		
DIS100A	1:1	3600	0.139	0.104	280	187	292	218	320	239	21	2,3
DIS120A	1:1	2700	0.167	0.125	300	224	350	262	384	287	50	2
DIS300A	1:1	2700	0.377	0.281	678	505	791	590	867	646	56	1

Dimensions

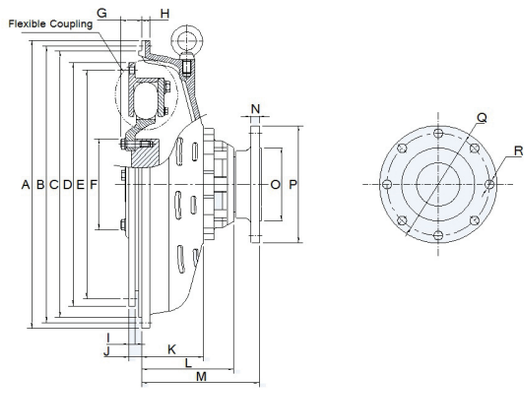

Rotation direction

Engine Direction(flywheel)

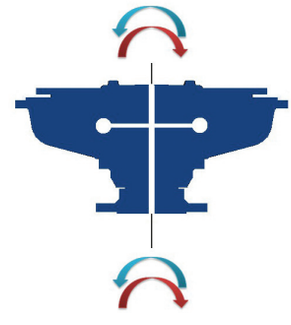

mm

Model	Housing (SAE)	A	B	C	D	E	F	G	H	I	J	K	L	M	N	O	P	Q	R
DIS100A	SAE#3	Ø450.8	Ø428.62	Ø409.58	Ø352.35	Ø333.38	Ø64.5	59.4	15	10	40	46	86	110	12	Ø75	Ø120	Ø101.5	Ø10.1
DIS120A	SAE#2	Ø489.0	Ø466.72	Ø447.68	Ø352.35	Ø333.38	Ø119.5	64.5	15	10	40	100	158	207	16	Ø140	Ø225	Ø196.2	Ø17
DIS300A	SAE#1	Ø552.4	Ø530.22	Ø511.18	Ø466.7	Ø448.15	Ø174.6	40.2	15	12	25	118	176	225	16	Ø140	Ø225	Ø196.2	Ø17

Mounting Example

Main engine pulley mounting type

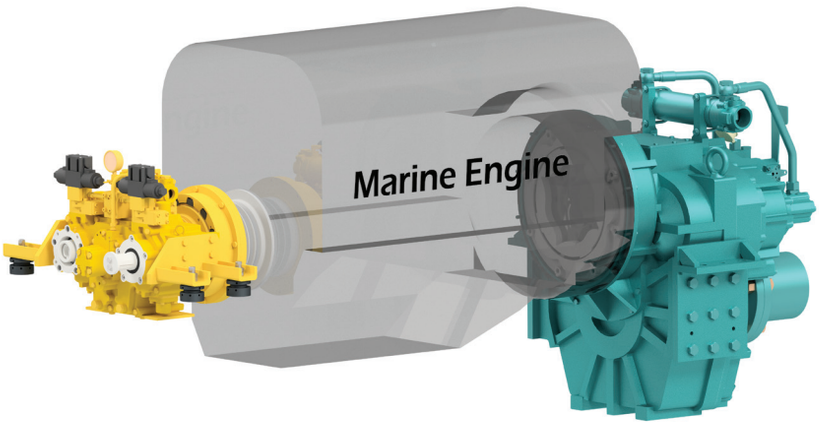

DPO 087
- Input: Engine pulley mounting type
- Output : A type (left pump, right shaft)

DPO160, 210, 310
- Input : Engine pulley mounting type
- Output : P type (pump mounting)

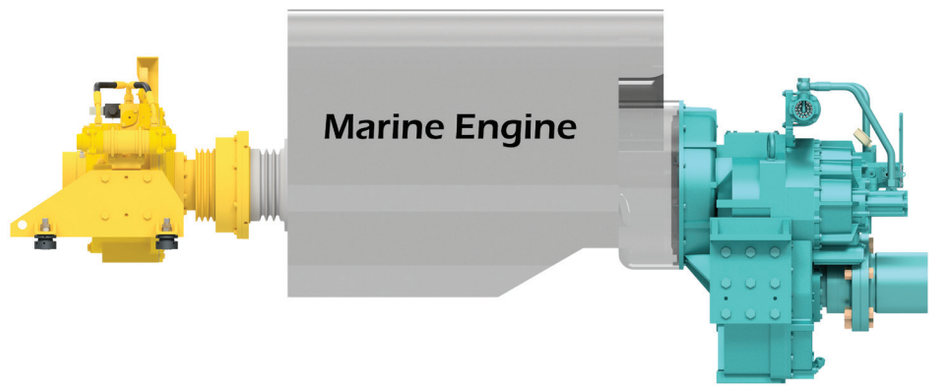

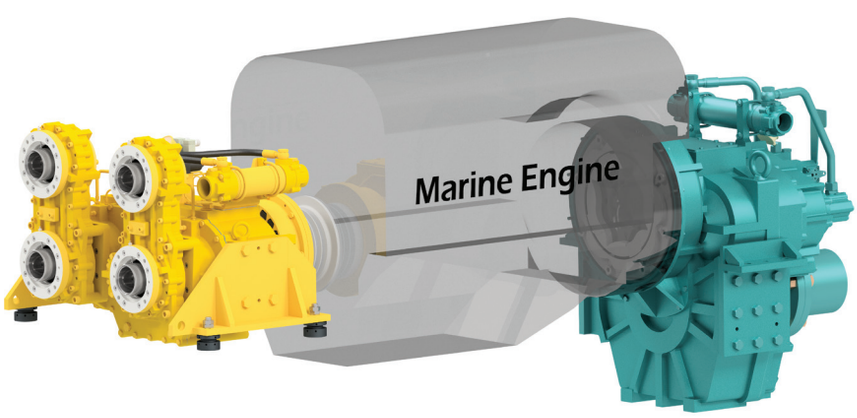

DPO167, 410
- Input : Engine pulley mounting type
- Output : D type (4 outputs)

Mounting Example

Auxiliary engine flywheel mounting type

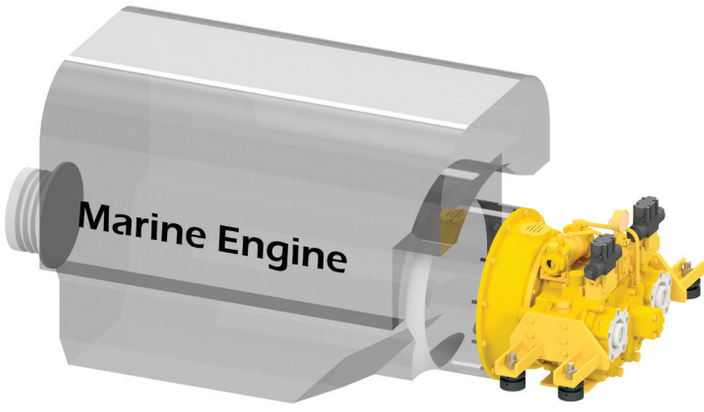

DPO 087
- Input: Engine flywheel mounting type
- Output : C type (left pump, right pump)

DPO160, 210, 310
- Input: Engine flywheel mounting type
- Output : S type (shaft)

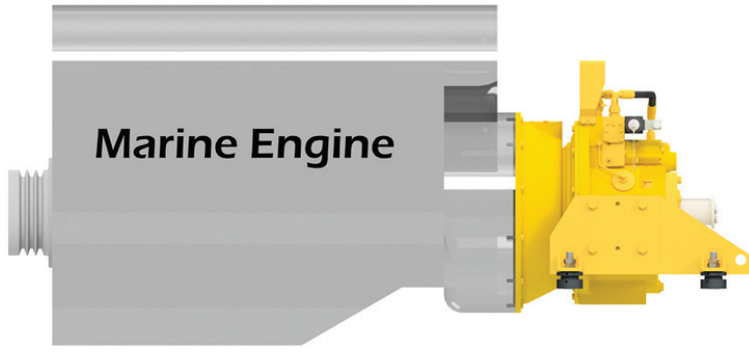

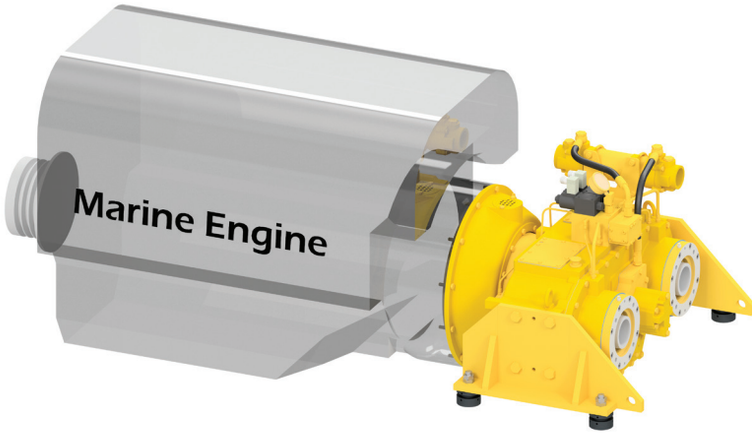

DPO167, 410
- Input: Engine flywheel mounting type
- Output : A type (2 outputs)

MARINE TRANSMISSON
HYDRAULIC STEERING SYSTEM
POWER TAKE OFF
SIDE THRUSTER
ELECTRONIC HANDLE UNIT
FLEXIBLE COUPLING_CENTA
HYDRAULIC PUMP, MOTOR
WATER MAKER

Copyright (C) D-I INDUSTRIAL CO., LTD. All rights reserved.
(52781) 13, Namgang-ro 1367 beon-gil, Jinju-si, Gyeongsangnam-do, Korea
TEL +82-55-760-5520 / FAX +82-55-760-5529 / Email : dicl@d-i.co.kr

[C2105C01N01K]