DMT260H MARINE TRANSMISSION SPECIFICATION			
GEAR RATIO	2.06, 2.50, 2.92, 3.26		
TOTAL WEIGHT	APPROX. 490 Kg(DRY)		
OIL CAPACITY	APPROX. 8 L		
OIL VISCOSITY	SAE # 30		
OIL PRESSURE	1.96 ~ 2.54 MPa	CLUTCH OIL	
DIRECTION OF ROTATION IN FORWARD	INPUT	C.C.W VIEWED FROM THE STERN	
	OUTPUT	C.W VIEWED FROM THE STERN	
OIL CHANGE INTERVAL	THE FIRST 100HOURS OF INITIAL OPERATION		
	AND EVERY 1000HOURS THEREAFTER		
SHIFTING LIMIT	UNDER 50% OF THE RATED ENGINE SPEED		
OIL COOLER	WATER FLOW 60 ~ 80 L/min		
	TEMPERATURE OF COOLING WATER	MAX 32°C	
OPERATING TORQUE OF SHIFTING LEVER	UNDER 2.94Nm		

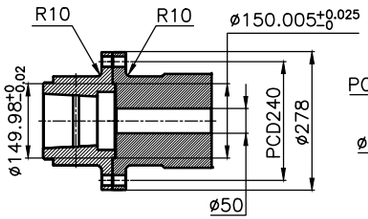

OUTPUT SHAFT COUPLING & PROPELLER COUPLING DIMENSION

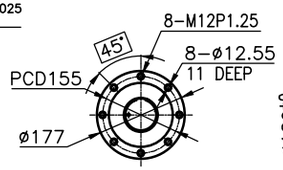

INPUT COUPLING DIMENSION

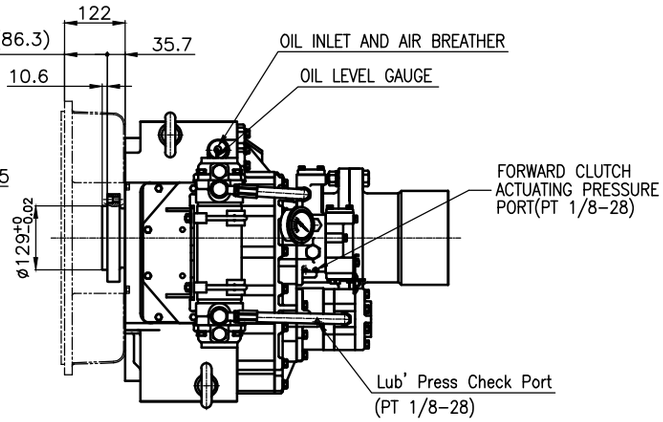

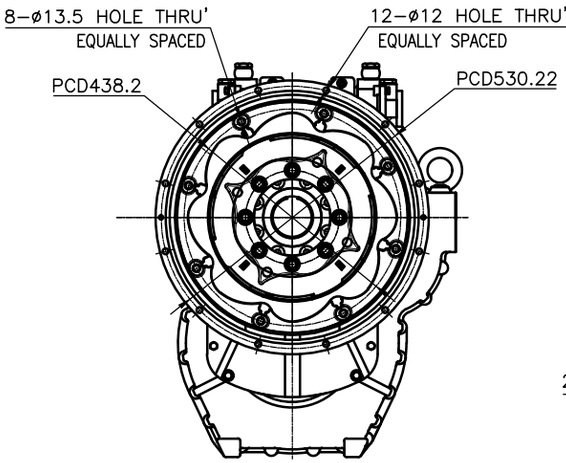

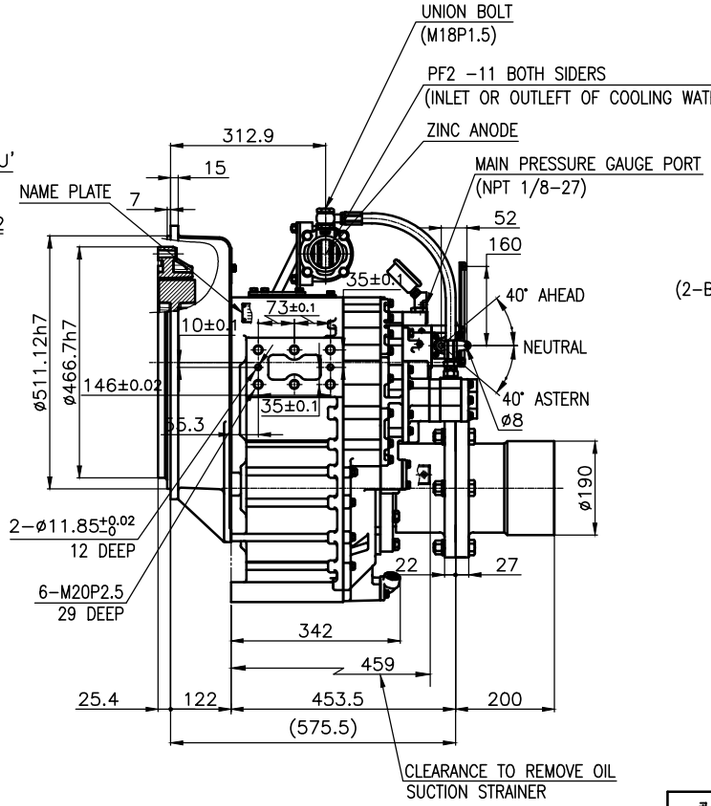

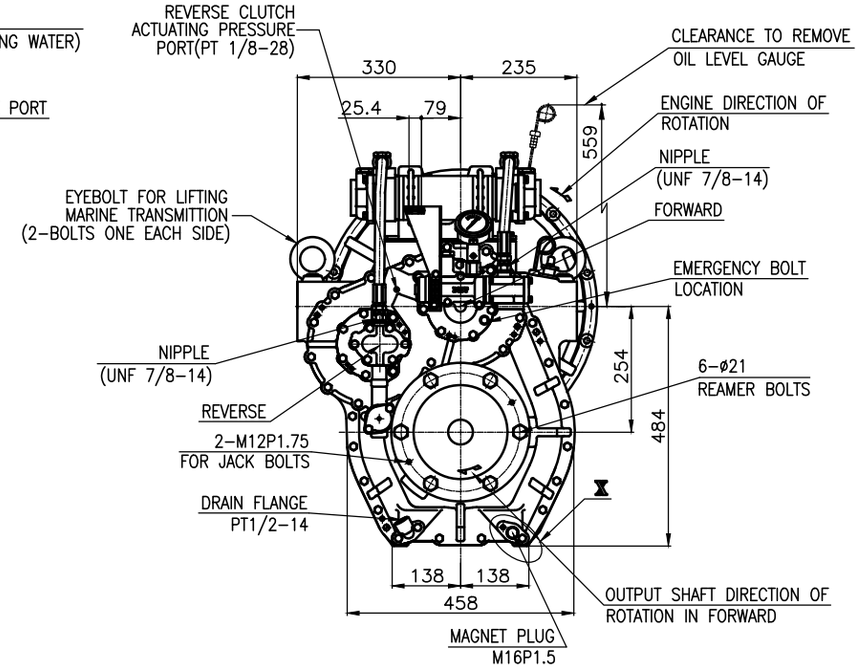

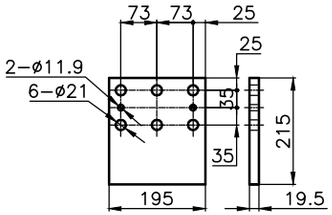

BRACKET DIMENSION

REMARK
1.HOUSING: SAE#1
2.DRIVING RING: SAE 14"
3.COUPLING TYPE
CENTA Flex Coupling (77268801)

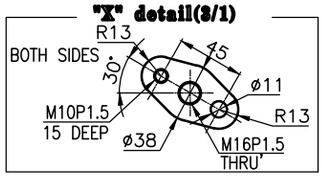

공통공차 TOLERANCE ON						
분수 FRACTIONS		소수 DECIMALS		각도 ANGLES		
± —		± —		± —		
일반공차 절삭가공						
구분		조급	중급	정급		
1 초과	4 이하	± 0.3	± 0.1	± 0.05		
4	16	± 0.5	± 0.2	± 0.07		
16	63	± 0.7	± 0.3	± 0.1		
63	250	± 1.2	± 0.5	± 0.2		
250	1000	± 2.0	± 0.8	± 0.3		

번호 NO.	품번 PART NO.	품명 PART NAME	개수 Q'TY	재질 MATERIAL	규격 SIZE	비고 REMARKS

재질 MATERIAL	—		
	작성 DATE 2018.09.12	척도 SCALE 1/1	
승인 APPROVED BY	검도 CHECKED BY	제도 DRAWN	설계 DESIGNED
JK.Kim	TH.Cha	GH.Park	

형식 TYPE	DMT260H		원도번 ORIGINAL DWG. NO.
품명 NAME	MARINE TRANSMISSION		
도번 DWG. NO.	25000GA~D-114CFR		개정(REV.) 000
D-I INDUSTRIAL	크기 SIZE	A3	코드번호 CODE ID. NO.

SHEET 1 OF 1
용이기술-004(841×594)