HYDRAULIC, ELECTRONIC STEERING SYSTEMS

D-I
INDUSTRIAL CO., LTD.

CHALLENGE FOR THE BEST SAILING

Rudder Torque Calculation

Hydraulic steering system should be selected by rudder torque.
The formula for calculating the rudder torque is as follows.

$$S \times [0.4 \times B - D] \times V^2 \times 17.80)$$

S: Rudder Area
A: Rudder height (m)
B: rudder width (m)
D: Rudder correction width (m)
V: Vessel Max Speed (Knot)
※Rudder Area = A x B(m^2)

Rudder Dimension

- This condition is applied when the vessel's maximum speed is less than 25 knots.
  ※ Please contact our sales team for the vessel's maximum speed more than 25 knots.
- The angle of from starboard to port was calculated as 80 ° in this formula.

Model Name Description and Steering Range | SYSTEM MODEL

Model Name Format Description

DPS 130 S

- DPS — SYSTEM MODEL
- 130 — MAX. TORQUE
- S — CYLINDER TYPE

CYLINDER TYPE

- · S ONE RUDDER SINGLE CYLINDER
- · R ROTARY CYLINDER
- · T ONE RUDDER TWIN CYLINDER
- · SW TWO RUDDER SINGLE CYLINDER
- · TW TWO RUDDER TWIN CYLINDER

MANUAL STEERING SYSTEM SELECTION

SYSTEM MODEL	NUMBERS OF TURNS LOCK TO LOCK(74º)		MAX. TORQUE (kgf · m)	HANDLE UNIT	CYLINDER GROUP
DMS 090S	6.3		91	DHM 035	S5015
DMS 100R	6.9		120	DHM 035	R100
DMS 120S	7.9		112	DHM 035	S5019
DMS 200S	8.1		208	DHP 063	S6024
DMS 350S	8.9		357	DHP 098	S9020
DMS 500S	10.2		497	DHP 119	S9028
DMS 240T	9.5		245	DHP 063	T5019
DMS 461T	9.5		461	DHP 119	T6024
DMS 090SW	6.3		91	DHM 035	SW5015
DMS 120SW	7.9		112	DHM 035	SW5019
DMS 200SW	8.1		208	DHP 063	SW6024
DMS 350SW	8.9		357	DHP 098	SW9020

POWER STEERING SYSTEM SELECTION

SYSTEM MODEL	NUMBER OF TURNS LOCK TO LOCK (74º)		MAX. TORQUE (kgf · m)	HANDLE UNIT	CYLINDER GROUP	PUMP DRIVE PULLEY	OIL TANK	RUDDER ANGLE SENSOR
DPS 130S	4.3		128	DHO 051	S5015	DSP20	DOT 20	DRSS 5K1
DPS 160S	5.4		159	DHO 051	S5019	DSP20	DOT 20	DRSS 5K1
DPS 300S	6.4		295	DHO 080	S6024	DSP20	DOT 20	DRSS 5K3
DPS 500S	5.5		505	DHO 160	S9020	DPU-V20F8	DOT 60	DRSS 5K3
DPS 700S	7.6		704	DHO 160	S9028	DPU-V20F8	DOT 60	DRSS 5K3
DPS 160R	4.7		169	DHO 051	R160	DSP20	DOT 20	DRSS 5K5
DPS 351T	5		348	DHO 120	T5019	DSP20	DOT 20	DRSS 5K2
DPS 651T	7.1		654	DHO 160	T6024	DPU-V20F8	DOT 60	DRSS 5K3
DPS 1200T	8.2		1,236	DHO 277	T9020	DP-V20F11	DOT 60	DRSS 5K3
DPS 1600T	10.8		1,723	DHO 277	T9028	DP-V20F11	DOT 60	DRSS 5K4
DPS 2000T	13.3		2,135	DHO 277	T10028	DP-V20F11	DOT 60	DRSS 5K4
DPS 130SW	4.3		128	DHO 051	SW5015	DSP20	DOT 20	DRSS 5K1
DPS 300SW	6.4		295	DHO 080	SW6024	DSP20	DOT 20	DRSS 5K3
DPS 500SW	5.5		505	DHO 160	SW9020	DPU-V20F8	DOT 60	DRSS 5K3
DPS 700SW	7.6		704	DHO 160	SW9028	DPU-V20F8	DOT 60	DRSS 5K3
DPS 351TW	5		348	DHO 120	TW5019	DSP20	DOT 20	DRSS 5K2
DPS 651TW	7.1		654	DHO 160	TW6024	DPU-V20F8	DOT 60	DRSS 5K3
DPS 1200TW	8.2		1,236	DHO 277	TW9020	DP-V20F11	DOT 60	DRSS 5K3
DPS 1600TW	10.8		1,723	DHO 277	TW9028	DP-V20F11	DOT 60	DRSS 5K4
DPS 2000TW	13.3		2,135	DHO 277	TW10028	DP-V20F11	DOT 60	DRSS 5K4

SYSTEM MODEL

ELECTRONIC STEERING SYSTEM

SYSTEM MODEL	NUMBER OF TURNS LOCK TO LOCK (74º)	MAX. TORQUE (kgf·m)	ELECTRONIC HANDLE UNIT	CYLINDER GROUP	PUMP DRIVE PULLEY	OIL TANK	RUDDER ANGLE SENSOR	SOLENOID BLOCK ASS'Y
DES 130S	3	128	DEH 100	S5015	DSP20	DOT 20	DRSA 5K1	DRT 20
DES 160S	3	159	DEH 100	S5019	DSP20	DOT 20	DRSA 5K1	DRT 20
DES 300S	3	295	DEH 100	S6024	DSP20	DOT 20	DRSA 5K3	DRT 20
DES 500S	3	505	DEH 100	S9020	DPU-V20F8	DOT 60	DRSA 5K3	DRT 20
DES 700S	3	704	DEH 100	S9028	DPU-V20F8	DOT 60	DRSA 5K3	DRT 20
DES 160R	3	169	DEH 100	R160	DSP20	DOT 20	DRSA 5K5	DRT 20
DES 351T	3	348	DEH 100	T5019	DSP20	DOT 20	DRSA 5K2	DRT 20
DES 651T	3	654	DEH 100	T6024	DPU-V20F8	DOT 60	DRSA 5K3	DRT 20
DES 1200T	3	1,236	DEH 100	T9020	DPU-V20F11	DOT 60	DRSA 5K3	DRT 20
DES 1600T	3	1,723	DEH 100	T9028	DPU-V20F11	DOT 60	DRSA 5K4	DRT 20
DES 2000T	3	2,135	DEH 100	T10028	DPU-V20F11	DOT 60	DRSA 5K4	DRT 20
DES 351TW	3	348	DEH 100	TW5019	DSP20	DOT 20	DRSA 5K2	DRT 20
DES 651TW	3	654	DEH 100	TW6024	DPU-V20F8	DOT 60	DRSS 5K3	DRT 20
DES 1200TW	3	1,236	DEH 100	TW9020	DPU-V20F11	DOT 60	DRSA 5K3	DRT 20
DES 1600TW	3	1,723	DEH 100	TW9028	DPU-V20F11	DOT 60	DRSA 5K4	DRT 20
DES 2000TW	3	2,135	DEH 100	TW10028	DPU-V20F11	DOT 60	DRSA 5K4	DRT 20

ELECTRONIC STEERING SYSTEM (POWER UNIT)

[220V / 60Hz / 24V]

SYSTEM MODEL	NUMBER OF TURNS LOCK TO LOCK (74º)	MAX. TORQUE (kgf·m)	ELECTRONIC HANDLE UNIT	CYLINDER GROUP	RUDDER ANGLE SENSOR	POWER UNIT	STEERING SYSTEM CONTROL BOX	EMERGENCY HANDLE	STEERING CONTROL PANEL
EDPS 351T/TW	3	348	DEH 100	T5019	DRSA 5K2	SP222EH2.2M1(M2)	SB22622D	DHM 044	SCP1
EDPS 651T/TW	3	654	DEH 100	T6024	DRSA 5K3	SP222EH2.2M1(M2)	SB22622D	DHM 044	SCP1
EDPS 1200T/TW	3	1,236	DEH 100	T9020	DRSA 5K3	SP223EH3.7M1(M2)	SB37622D	DHM 044	SCP1
EDPS 1600T/TW	3	1,723	DEH 100	T9028	DRSA 5K4	SP224EH3.7M1(M2)	SB37622D	DHM 044	SCP1
EDPS 2000T/TW	3	2,135	DEH 100	T10028	DRSA 5K4	SP224EH3.7M1(M2)	SB37622D	DHM 044	SCP1
EDPS 3500TW	3	3,503	DEH 100	T12034	DRSA 5K4	SP225EH5.5M1	SB37622D	DHM 044	SCP1

※ M1 : One motor M2 : Two motors
※ For more details, please refer to page 28~39.

MANUAL STEERING SYSTEM

1. ONE RUDDER

1-1 SINGLE HANDLE / ONE RUDDER SINGLE CYLINDER
1-2 SINGLE HANDLE / ROTARY CYLINDER
1-3 SINGLE HANDLE / ONE RUDDER SINGLE CYLINDER
1-4 SINGLE HANDLE / ONE RUDDER TWIN CYLINDER

2. TWO RUDDERS

2-1 SINGLE HANDLE / TWO RUDDERS SINGLE CYLINDER
2-2 SINGLE HANDLE / TWO RUDDERS SINGLE CYLINDER

3. CATAMARAN

3-1 SINGLE HANDLE / SINGLE CYLINDER / CATAMARAN
3-2 SINGLE HANDLE / ROTARY CYLINDER / CATAMARAN

4. TWO HANDLE MANUAL STEERING SYSTEM DIAGRAM

4-1 TWO HANDLES MANUAL STEERING SYSTEM DIAGRAM (DHM)
4-2 TWO HANDLES MANUAL STEERING SYSTEM DIAGRAM (DHP, CATAMARAN)

POWER STEERING SYSTEM

5. ONE RUDDER

5-1 SINGLE HANDLE / ONE RUDDER SINGLE CYLINDER
5-2 SINGLE HANDLE / ROTARY CYLINDER
5-3 SINGLE HANDLE / ONE RUDDER TWIN CYLINDER

6. TWO RUDDERS

6-1 SINGLE HANDLE / TWO RUDDERS SINGLE CYLINDER
6-2 SINGLE HANDLE / TWO RUDDERS TWIN CYLINDER

7. TWO HANDLES POWER STEERING DIAGRAM

7-1 TWO HANDLES POWER STEERING DIAGRAM

ELECTRIC STEERING SYSTEM

8. ONE RUDDER

8-1 ELECTRONIC HANDLE / ONE RUDDER SINGLE CYLINDER
8-2 ELECTRONIC HANDLE / ROTARY CYLINDER
8-3 ELECTRONIC HANDLE / ONE RUDDER TWIN CYLINDER

9. TWO RUDDERS

9-1 ELECTRONIC HANDLE / TWO RUDDERS SINGLE CYLINDER
9-2 ELECTRONIC HANDLE / TWO RUDDERS TWIN CYLINDER

ELECTRIC STEERING SYSTEM (POWER UNIT)

10. ONE RUDDER (POWER UNIT)

10-1 ELECTRONIC HANDLE / ONE RUDDER TWIN CYLINDER / POWER UNIT (SINGLE MOTOR)
10-2 ELECTRONIC HANDLE / ONE RUDDER TWIN CYLINDER / POWER UNIT (EMERGENCY MOTOR)
10-3 ELECTRONIC HANDLE / ONE RUDDER TWIN CYLINDER / DOUBLE POWER UNIT

11. TWO RUDDERS (POWER UNIT)

11-1 ELECTRONIC HANDLE / TWO RUDDERS TWIN CYLINDERS / POWER UNIT (SINGLE MOTOR)
11-2 ELECTRONIC HANDLE / TWO RUDDERS TWIN CYLINDERS / POWER UNIT (EMERGENCY MOTOR)
11-3 ELECTRONIC HANDLE / TWO RUDDERS TWIN CYLINDERS / DOUBLE POWER UNIT

12. TWO HANDLES ELECTRONIC STEERING DIAGRAM

13. TWO HANDLES ELECTRONIC STEERING DIAGRAM (POWER UNIT)

COMPONENTS DESCRIPTION

14. COMPONENTS DESCRIPTION

MANUAL STEERING SYSTEM

1-1 SINGLE HANDLE / ONE RUDDER SINGLE CYLINDER

DIAGRAM

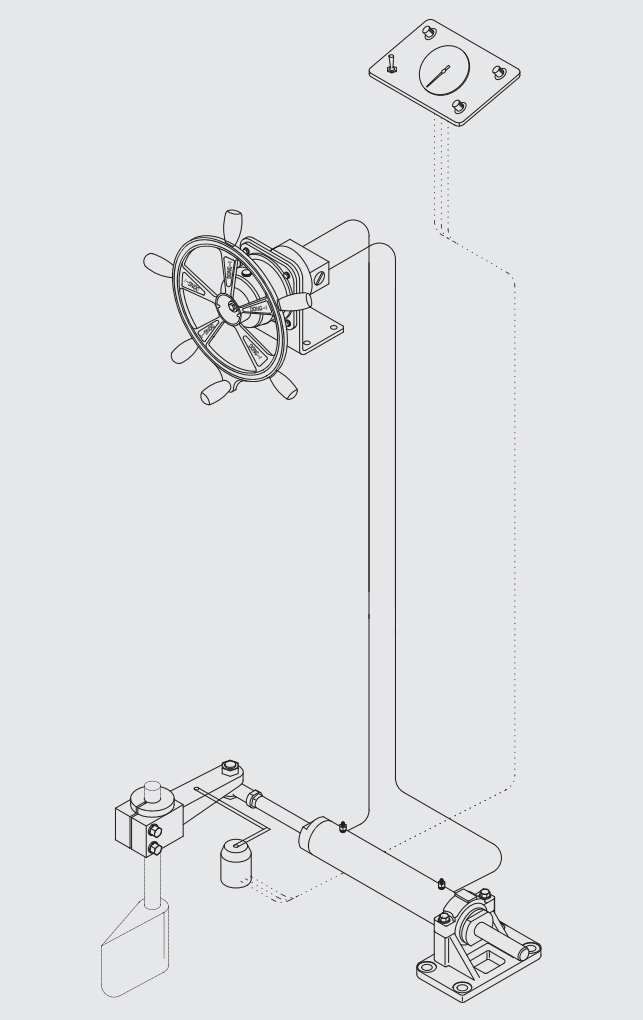

COMPONENTS

HANDLE UNIT

CYLINDER GROUP

OPTION

RUDDER ANGLE INDICATOR

RUDDER ANGLE SENSOR

MODEL	NUMBER OF TURNS LOCK TO LOCK (74º)		MAX. TORQUE (kgf · m)	DIVISION	COMPONENTS		OPTION	
					HANDLE UNIT	CYLINDER GROUP	RUDDER ANGLE INDICATOR	RUDDER ANGLE SENSOR
DMS 090S	6.3		91	Model	DMH 035	S5015	DAI10	DRSS 5K1
				Part No	98114103C	98111000S	98636122	98600005
DMS 120S	7.9		112	Model	DMH 035	S5019	DAI10	DRSS 5K1
				Part No	98114103C	98114000S	98636122	98600005

MANUAL STEERING SYSTEM

1-2 SINGLE HANDLE / ROTARY CYLINDER

DIAGRAM

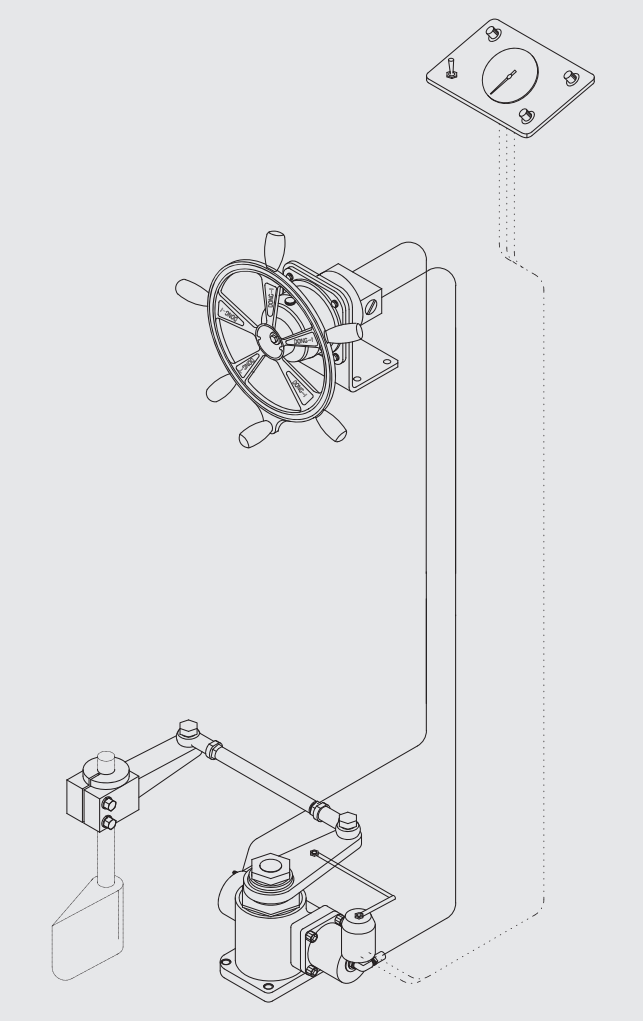

COMPONENTS

HANDLE UNIT

CYLINDER GROUP

OPTION

RUDDER ANGLE INDICATOR

RUDDER ANGLE SENSOR

MODEL	NUMBER OF TURNS LOCK TO LOCK (74º)	MAX. TORQUE (kgf · m)	DIVISION	COMPONENTS		OPTION	
				HANDLE UNIT	CYLINDER GROUP	RUDDER ANGLE INDICATOR	RUDDER ANGLE SENSOR
DMS 100R	6.9	120	Model	DMH 035	R100	DAI10	DRSS 5K5
			Part No	98114103C	98117000R	98636122	98600021

MANUAL STEERING SYSTEM

1-3 SINGLE HANDLE / ONE RUDDER SINGLE CYLINDER

DIAGRAM

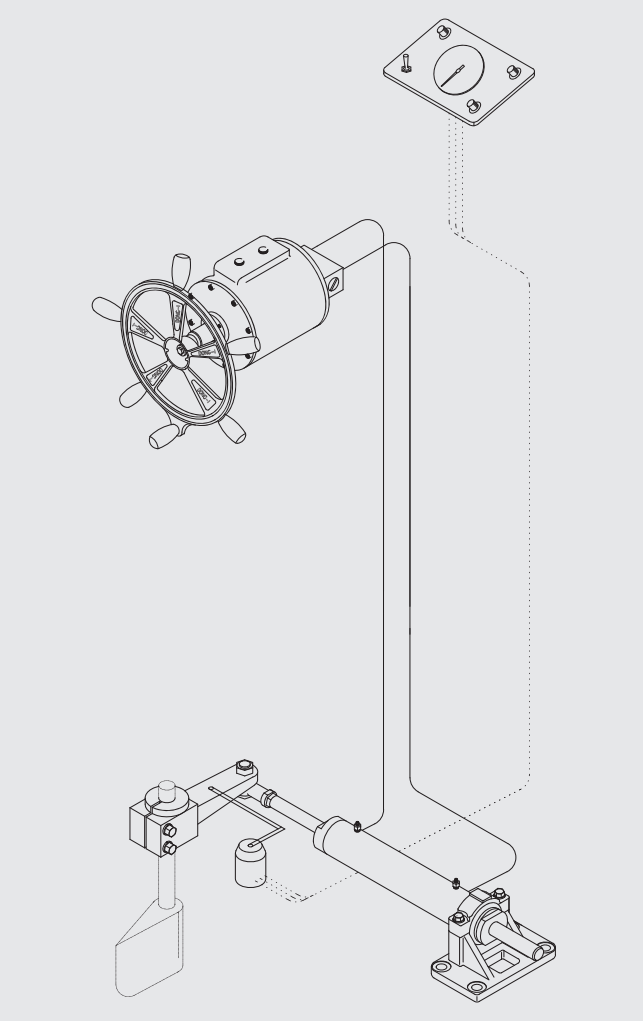

COMPONENTS

HELM PUMP

CYLINDER GROUP

OPTION

RUDDER ANGLE INDICATOR

RUDDER ANGLE SENSOR

MODEL	NUMBER OF TURNS LOCK TO LOCK (74º)	MAX. TORQUE (kgf · m)	DIVISION	COMPONENTS		OPTION	
				HELM PUMP	CYLINDER GROUP	RUDDER ANGLE INDICATOR	RUDDER ANGLE SENSOR
DMS 200S	8.1	208	Model	DHP 063	S6024	DAI10	DRSS 5K3
			Part No	98226000G	98123000S	98636122	98600016
DMS 350S	8.9	357	Model	DHP 098	S9020	DAI10	DRSS 5K3
			Part No	98232000G	98126000S	98636122	98600016
DMS 500S	10.2	497	Model	DHP 119	S9028	DAI10	DRSS 5K3
			Part No	98235000G	98129000S	98636122	98600016

※ Please purchase HANDLE UNIT seperately by referring page 47.
※ When purchasing a helm pump, please refer to the handle shaft type on page 46 and 47.

MANUAL STEERING SYSTEM

1-4 SINGLE HANDLE / ONE RUDDER TWIN CYLINDER

DIAGRAM

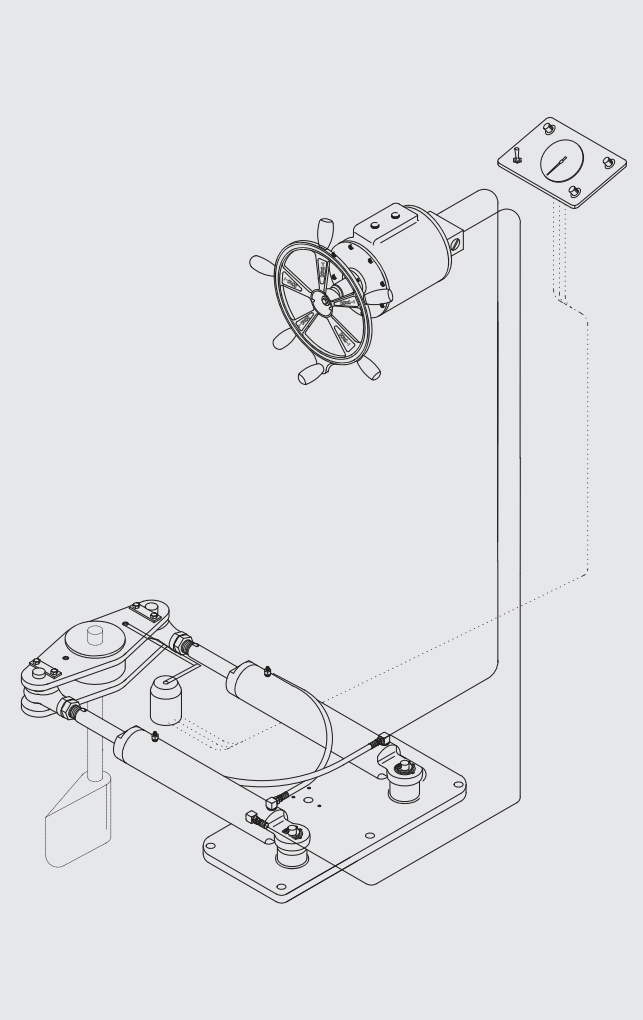

COMPONENTS

HELM PUMP

CYLINDER GROUP

OPTION

RUDDER ANGLE INDICATOR

RUDDER ANGLE SENSOR

MODEL	NUMBER OF TURNS LOCK TO LOCK (74º)	MAX. TORQUE (kgf · m)	DIVISION	COMPONENTS		OPTION	
				HELM PUMP	CYLINDER GROUP	RUDDER ANGLE INDICATOR	RUDDER ANGLE SENSOR
DMS 240T	9.5	245	Model	DHP 063	T5019	DAI10	DRSS 5K2
			Part No	98226000G	98161000T	98636122	98600009
DMS 461T	9.5	461	Model	DHP 119	T6024	DAI10	DRSS 5K3
			Part No	98235000G	98164000T	98636122	98600016

※ Please purchase HANDLE UNIT seperately by referring page 47.
※ When purchasing a helm pump, please refer to the handle shaft type on page 46 and 47.

MANUAL STEERING SYSTEM

2-1 SINGLE HANDLE / TWO RUDDERS SINGLE CYLINDER

DIAGRAM

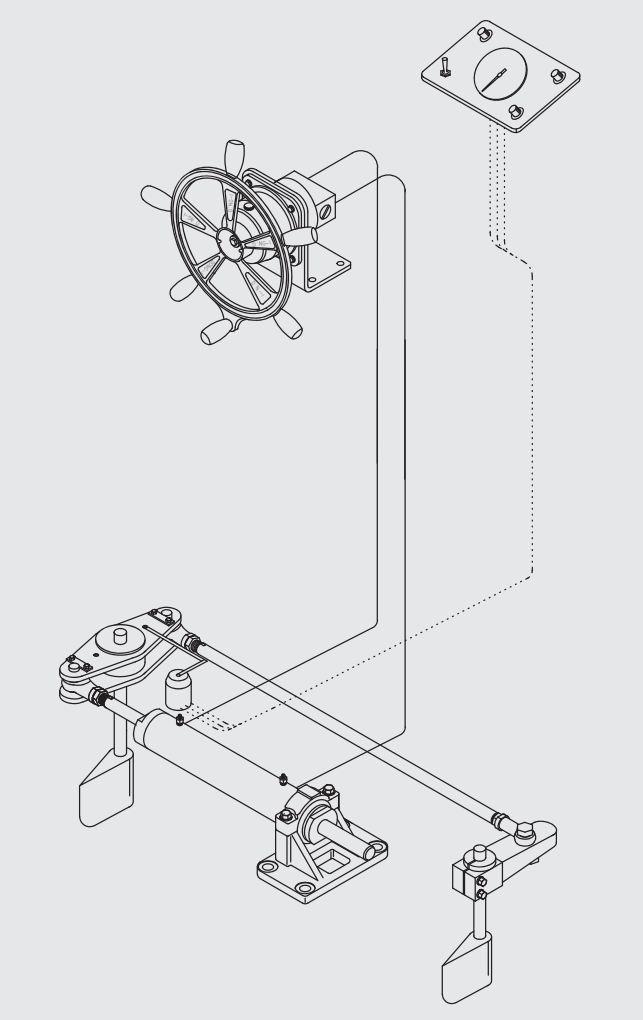

COMPONENTS

HANDLE UNIT

CYLINDER GROUP

OPTION

RUDDER ANGLE INDICATOR

RUDDER ANGLE SENSOR

MODEL	NUMBER OF TURNS LOCK TO LOCK (74º)	MAX. TORQUE (kgf · m)	DIVISION	COMPONENTS		OPTION	
				HANDLE UNIT	CYLINDER GROUP	RUDDER ANGLE INDICATOR	RUDDER ANGLE SENSOR
DMS 090SW	6.3	91	Model	DMH 035	SW5015	DAI10	DRSS 5K1
			Part No	98114103C	98111000SW	98636122	98600005
DMS 120SW	7.9	112	Model	DMH 035	SW5019	DAI10	DRSS 5K1
			Part No	98114103C	98114000SW	98636122	98600005

MANUAL STEERING SYSTEM

2-2 SINGLE HANDLE / TWO RUDDERS SINGLE CYLINDER

DIAGRAM

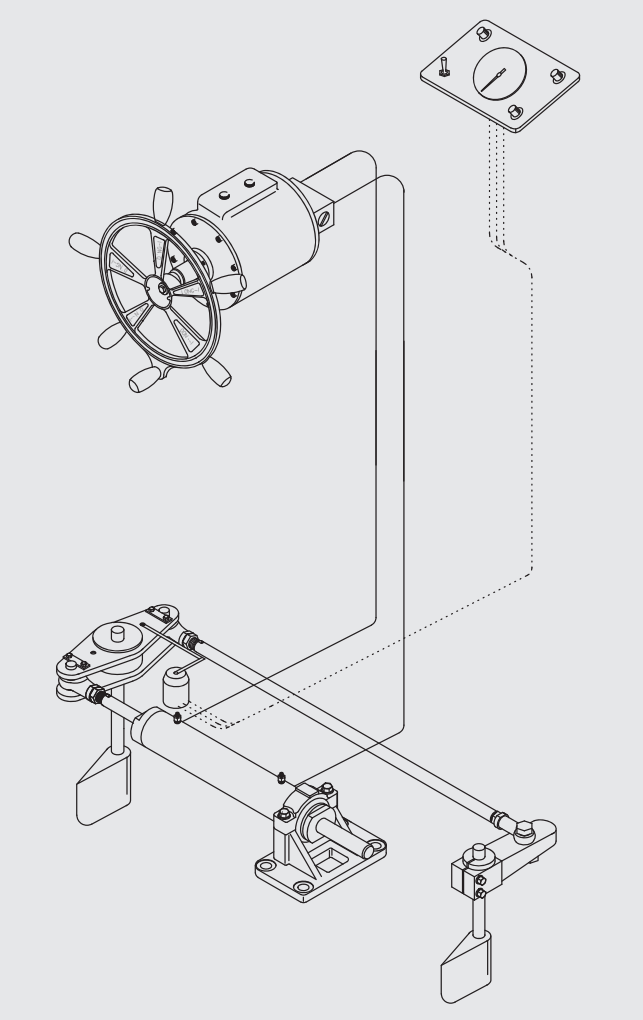

COMPONENTS

HELM PUMP

CYLINDER GROUP

OPTION

RUDDER ANGLE INDICATOR

RUDDER ANGLE SENSOR

MODEL	NUMBER OF TURNS LOCK TO LOCK (74º)	MAX. TORQUE (kgf · m)	DIVISION	COMPONENTS		OPTION	
				HELM PUMP	CYLINDER GROUP	RUDDER ANGLE INDICATOR	RUDDER ANGLE SENSOR
DMS 200SW	8.1	208	Model	DHP 063	SW6024	DAI10	DRSS 5K3
			Part No	98226000G	98123000SW	98636122	98600016
DMS 350SW	8.9	357	Model	DHP 098	SW9020	DAI10	DRSS 5K3
			Part No	98232000G	98126000SW	98636122	98600016

※ Please purchase HANDLE UNIT seperately by referring page 47.
※ When purchasing a helm pump, please refer to the handle shaft type on page 46 and 47.

MANUAL STEERING SYSTEM

3-1 SINGLE HANDLE / ONE RUDDER SINGLE CYLINDER / CATAMARAN

DIAGRAM

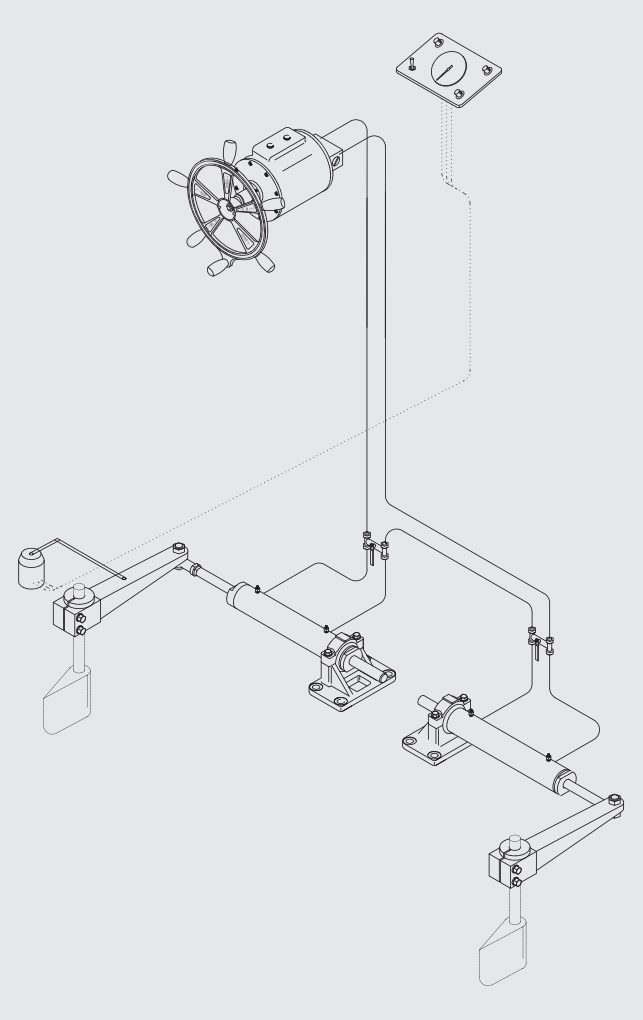

COMPONENTS

HELM PUMP

CYLINDER GROUP

OPTION

RUDDER ANGLE INDICATOR

RUDDER ANGLE SENSOR

MODEL	NUMBER OF TURNS LOCK TO LOCK (74º)	MAX. TORQUE (kgf · m)	DIVISION	COMPONENTS		OPTION	
				HELM PUMP	CYLINDER GROUP	RUDDER ANGLE INDICATOR	RUDDER ANGLE SENSOR
DMS 200S	8.1	208	Model	DHP 063	S6024	DAI10	DRSS 5K3
			Part No	98226000G	98123000S	98636122	98600016
DMS 350S	8.9	357	Model	DHP 098	S9020	DAI10	DRSS 5K3
			Part No	98232000G	98126000S	98636122	98600016
DMS 500S	10.2	497	Model	DHP 119	S9028	DAI10	DRSS 5K3
			Part No	98235000G	98129000S	98636122	98600016

※ For these models, two cylinders are required.
※ Please purchase HANDLE UNIT seperately by referring page 47.
※ Please purchase two nipples by referring Page 62.
※ When purchasing a helm pump, please refer to the handle shaft type on page 46 and 47.

MANUAL STEERING SYSTEM

3-2 SINGLE HANDLE / ROTARY CYLINDER / CATAMARAN

DIAGRAM

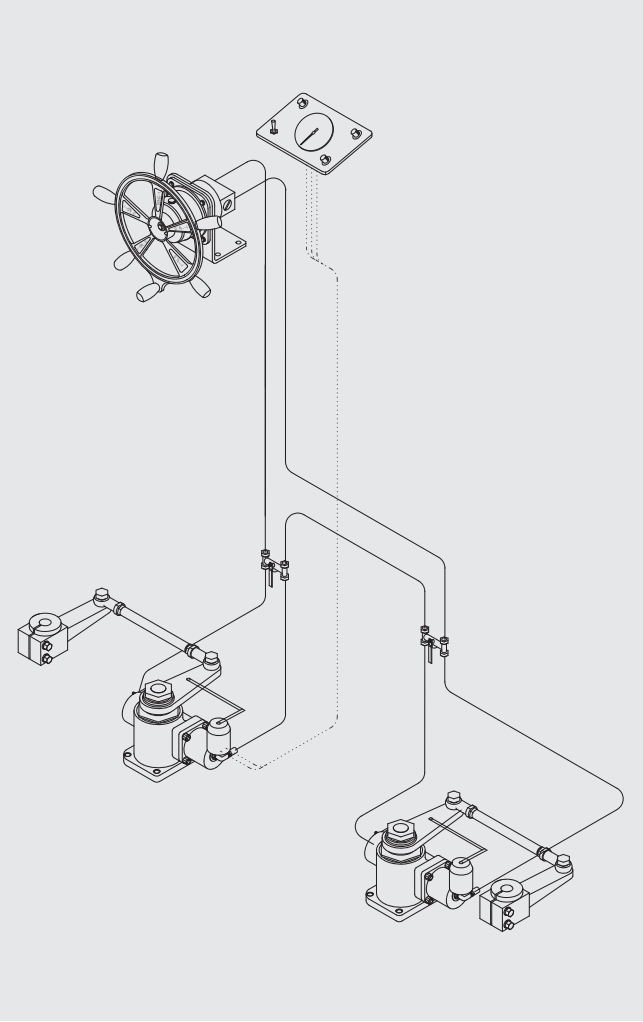

COMPONENTS

HANDLE UNIT

CYLINDER GROUP

OPTION

RUDDER ANGLE INDICATOR

RUDDER ANGLE SENSOR

MODEL	NUMBER OF TURNS LOCK TO LOCK (74º)	ENGINE HP	MAX. TORQUE (kgf · m)	DIVISION	COMPONENTS		OPTION	
					HANDLE UNIT	CYLINDER GROUP	RUDDER ANGLE INDICATOR	RUDDER ANGLE SENSOR
DMS 100R	6.9	110	120	Model	DMH 035	R100	DAI10	DRSS 5K5
				Part No	98114103C	98117000R	98636122	98600021

※ For these models, two cylinders are required.
※ Please purchase HANDLE UNIT seperately by referring page 47.
※ Please purchase two nipples by referring Page 62.

4-1 TWO HANDLE MANUAL STEERING SYSTEM DIAGRAM (DHM)

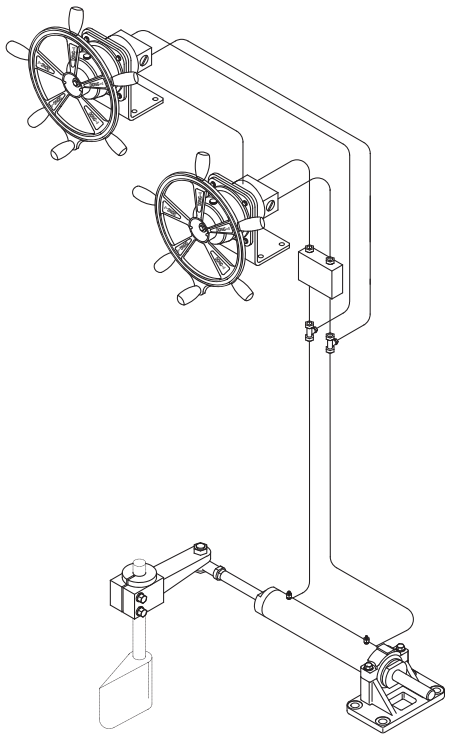

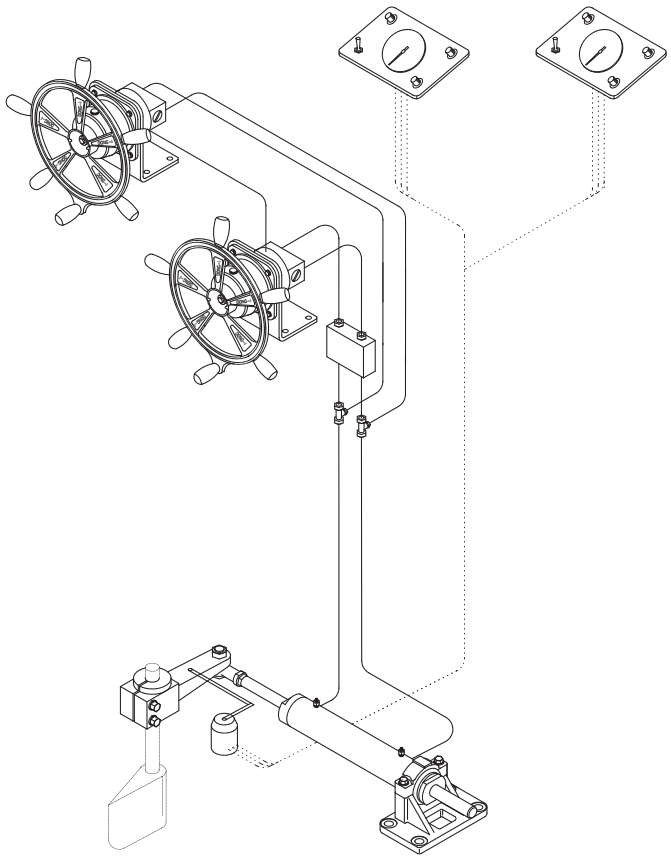

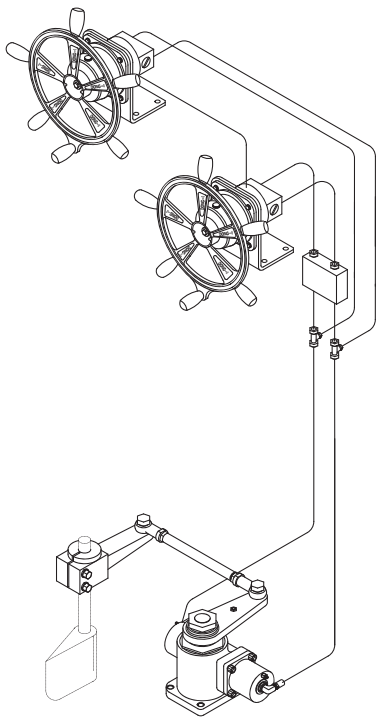

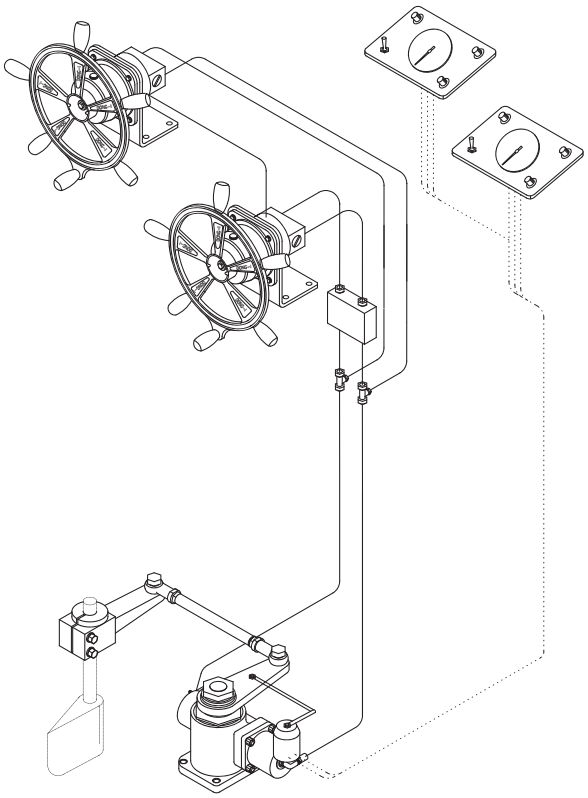

※ Please purchase two T-Nipples ass'y by refering page 62.
※ Please purchase a Lock valve by refering page 61.

4-2 TWO HANDLE MANUAL STEERING SYSTEM DIAGRAM (DHP)

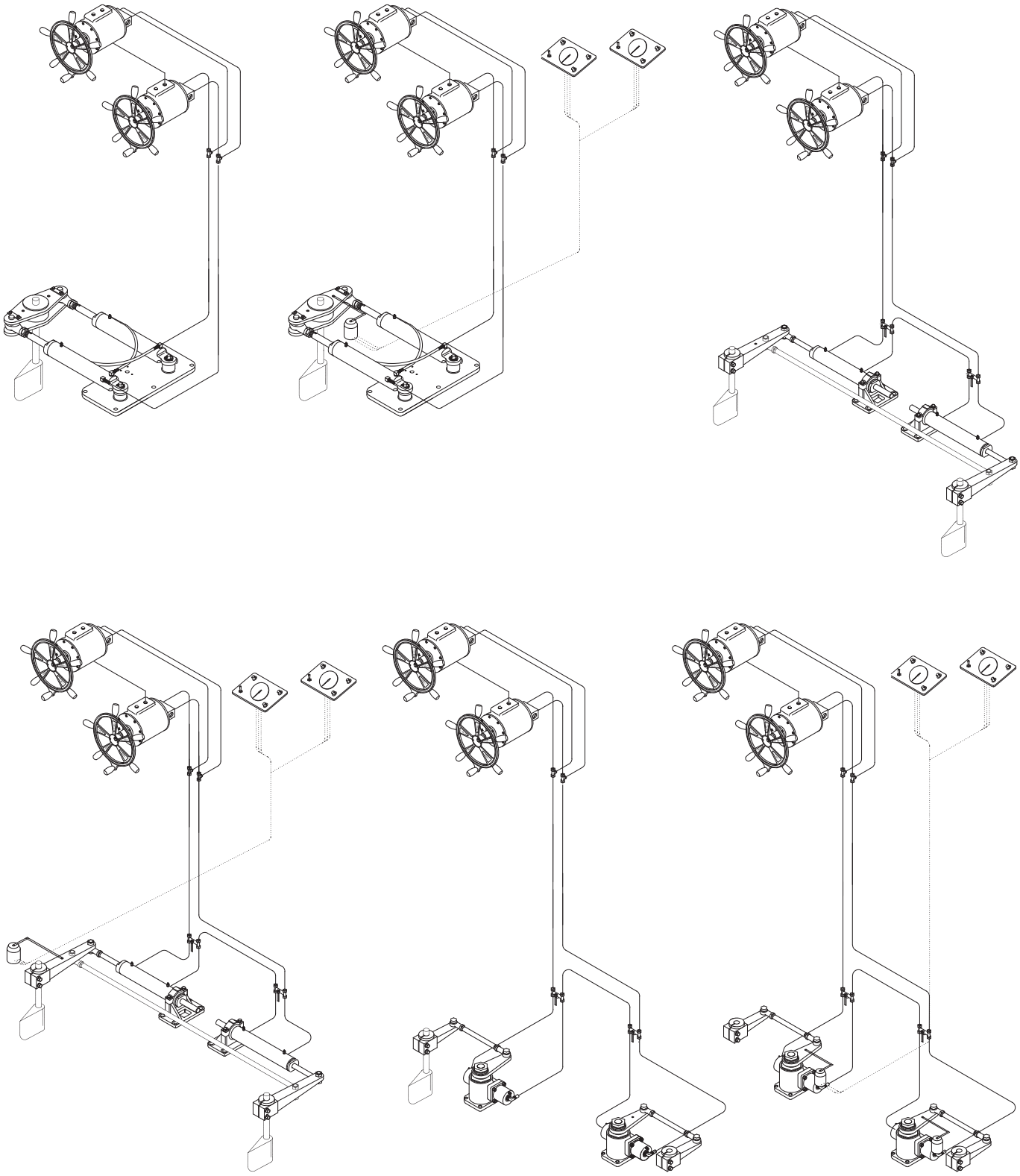

※ When applying the twin cylinders, please purchase two T-type nipples by referring to page 62.

POWER STEERING SYSTEM

5-1 SINGLE HANDLE / ONE RUDDER SINGLE CYLINDER

DIAGRAM

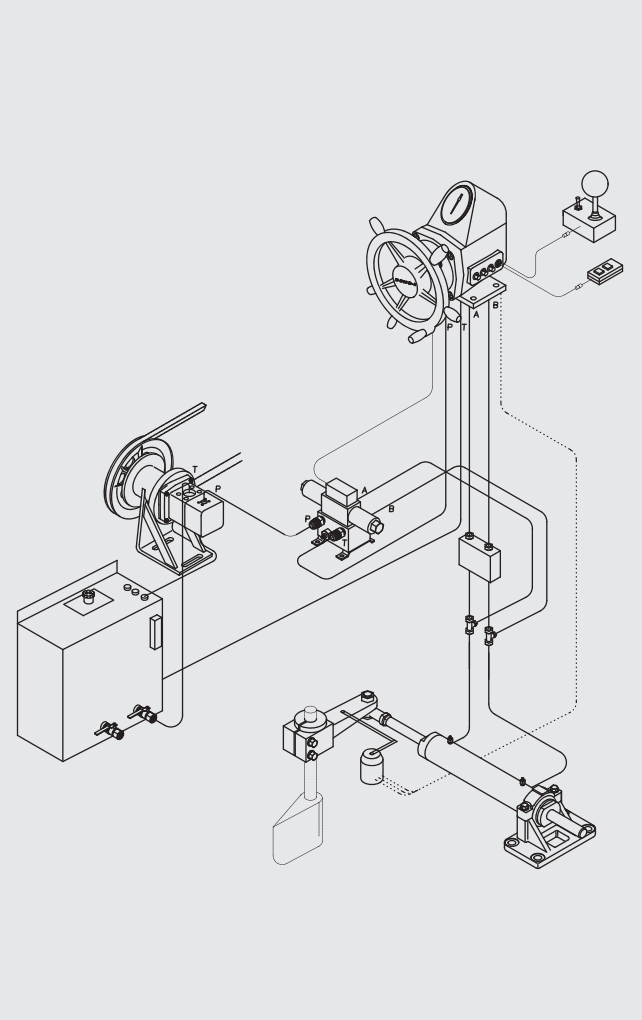

COMPONENTS

HANDLE UNIT

CYLINDER GROUP

PUMP DRIVE PULLEY

OIL TANK

RUDDER ANGLE SENSOR

OPTION

SOLENOID BLOCK

CONTROL BOX

SWITCH

MODEL	NUMBER OF TURNS LOCK TO LOCK (74º)	ENGINE HP	MAX. TORQUE (kgf·m)	DIVISION	HANDLE UNIT	CYLINDER GROUP	PUMP DRIVE PULLEY	OIL TANK	RUDDER ANGLE SENSOR	OPTION		
										SOLENOID BLOCK	CONTROL BOX	SWITCH
DPS 130S	4.3	180	128	Model	DHO 051	S5015	DSP20	DOT 20	DRSS 5K1	DRT-10	DSC	HY-1022
				Part No	98261700	98111000S	98452120G	99065401AS	98600005	99016800AS	98684001	98117830
DPS 160S	5.4	250	159	Model	DHO 051	S5019	DSP20	DOT 20	DRSS 5K1	DRT-10	DSC	HY-1022
				Part No	98261700	98114000S	98452120G	99065401AS	98600005	99016800AS	98684001	98117830
DPS 300S	6.4	350	295	Model	DHO 080	S6024	DSP20	DOT 20	DRSS 5K3	DRT-10	DSC	HY-1022
				Part No	98264700	98123000S	98452120G	99065401AS	98600016	99016800AS	98684001	98117830
DPS 500S	5.5	550	505	Model	DHO 160	S9020	DPU-V20F8	DOT 60	DRSS 5K3	DRT-10	DSC	HY-1022
				Part No	98269700	98126000S	98451700	98500200AS	98600016	99016800AS	98684001	98117830
DPS 700S	7.6	650	704	Model	DHO 160	S9028	DPU-V20F8	DOT 60	DRSS 5K3	DRT-10	DSC	HY-1022
				Part No	98269700	98129000S	98451700	98500200AS	98600016	99016800AS	98684001	98117830

※ When purchasing a solenoid valve, please refer to page 62 and purchase two T-type nipples.

POWER STEERING SYSTEM

5-2 SINGLE HANDLE / ROTARY CYLINDER

DIAGRAM

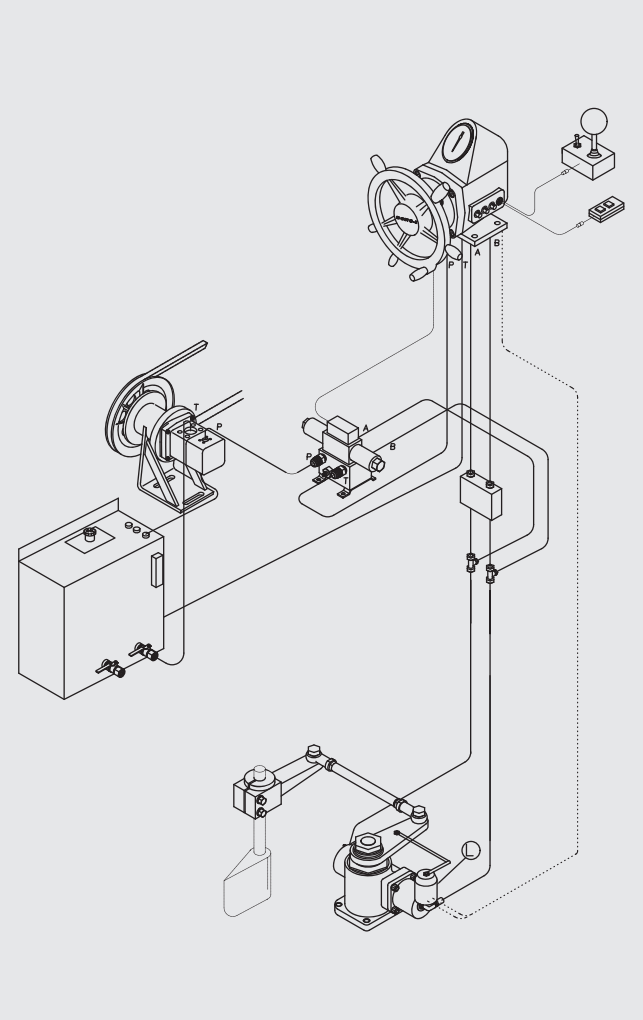

COMPONENTS

HANDLE UNIT

CYLINDER GROUP

PUMP DRIVE PULLEY

OIL TANK

RUDDER ANGLE SENSOR

OPTION

SOLENOID BLOCK

CONTROL BOX

SWITCH

MODEL	NUMBER OF TURNS LOCK TO LOCK (74º)	ENGINE HP	MAX. TORQUE (kgf·m)	DIVISION	HANDLE UNIT	CYLINDER GROUP	PUMP DRIVE PULLEY	OIL TANK	RUDDER ANGLE SENSOR	OPTION		
										SOLENOID BLOCK	CONTROL BOX	SWITCH
R160	4.7	250	169	Model	DHO 051	R160	DSP20	DOT 20	DRSS 5K5	DRT-10	DSC	HY-1022
				Part No	98261700	98117000P	98452120G	99065401AS	98600021	99016800AS	98684001	98117830

※ When purchasing a solenoid valve, please refer to page 62 and purchase two T-type nipples.

POWER STEERING SYSTEM

5-3 SINGLE HANDLE / ONE RUDDER TWIN CYLINDER

DIAGRAM

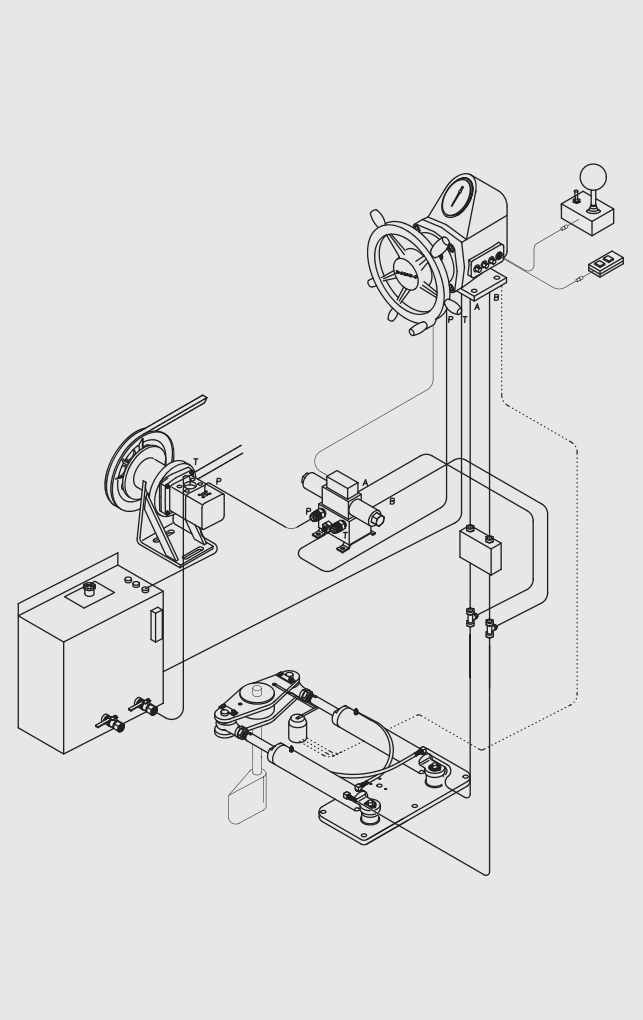

COMPONENTS

HANDLE UNIT

CYLINDER GROUP

PUMP DRIVE PULLEY

OIL TANK

RUDDER ANGLE SENSOR

OPTION

SOLENOID BLOCK

CONTROL BOX

SWITCH

MODEL	NUMBER OF TURNS LOCK TO LOCK (74º)	ENGINE HP	MAX. TORQUE (kgf·m)	DIVISION	HANDLE UNIT	CYLINDER GROUP	PUMP DRIVE PULLEY	OIL TANK	RUDDER ANGLE SENSOR	OPTION		
										SOLENOID BLOCK	CONTROL BOX	SWITCH
DPS 351T	5	400	348	Model	DHO 120	T5019	DSP20	DOT 20	DRSS 5K2	DRT-10	DSC	HY-1022
				Part No	98267700	98161000T	98452120G	99065401AS	98600009	99016800AS	98684001	98117830
DPS 651T	7.1	600	654	Model	DHO 160	T6024	DPU-V20F8	DOT 60	DRSS 5K3	DRT-10	DSC	HY-1022
				Part No	98269700	98164000T	98451700	98500200AS	98600016	99016800AS	98684001	98117830
DPS 1200T	8.2	1000	1236	Model	DHO 277	T9020	DP-V20F11	DOT 60	DRSS 5K3	DRT-10	DSC	HY-1022
				Part No	98276700	98167000T	98453700	98500300AS	98600016	99016800AS	98684001	98117830
DPS 1600T	10.8	1200	1723	Model	DHO 277	T9028	DP-V20F11	DOT 60	DRSS 5K4	DRT-10	DSC	HY-1022
				Part No	98276700	98170000T	98453700	98500300AS	98600018	99016800AS	98684001	98117830
DPS 2000T	13.3	1800	2135	Model	DHO 277	T10028	DP-V20F11	DOT 60	DRSS 5K4	DRT-10	DSC	HY-1022
				Part No	98276700	98173000T	98453700	98500300AS	98600018	99016800AS	98684001	98117830

※ When purchasing a solenoid valve, please refer to page 62 and purchase two T-type nipples.

POWER STEERING SYSTEM

6-1 SINGLE HANDLE / TWO RUDDERS SINGLE CYLINDER

DIAGRAM

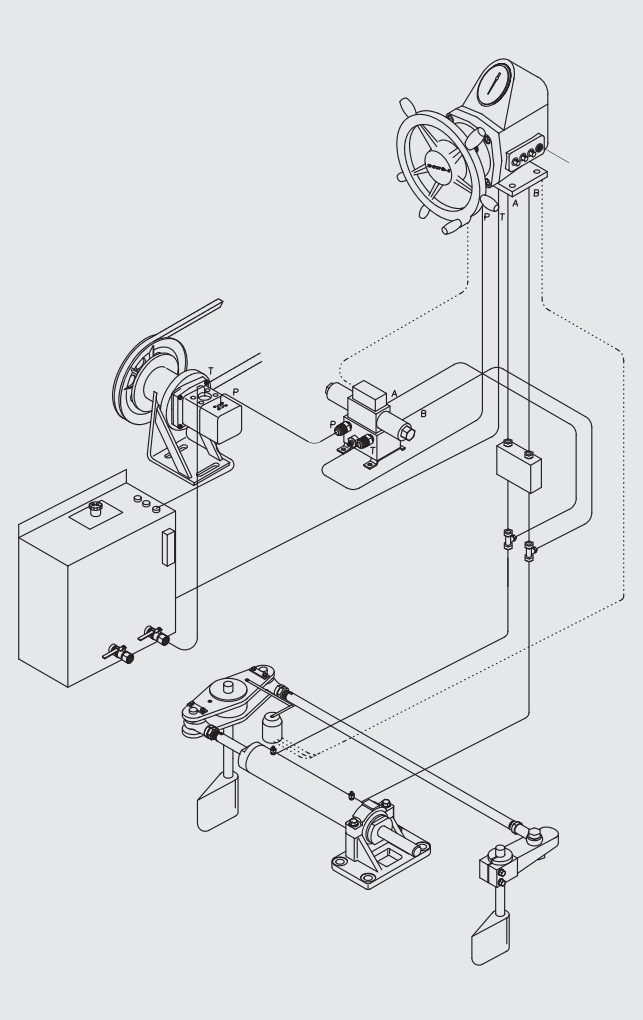

COMPONENTS

HANDLE UNIT

CYLINDER GROUP

PUMP DRIVE PULLEY

OIL TANK

RUDDER ANGLE SENSOR

OPTION

SOLENOID BLOCK

CONTROL BOX

SWITCH

MODEL	NUMBER OF TURNS LOCK TO LOCK (74º)	ENGINE HP	MAX. TORQUE (kgf·m)	DIVISION	HANDLE UNIT	CYLINDER GROUP	PUMP DRIVE PULLEY	OIL TANK	RUDDER ANGLE SENSOR	OPTION		
										SOLENOID BLOCK	CONTROL BOX	SWITCH
DPS 130SW	4.3	90 X 2	128	Model	DHO 051	SW5015	DSP20	DOT 20	DRSS 5K1	DRT-10	DSC	HY-1022
				Part No	98261700	98111000SW	98452120G	99065401AS	98600005	99016800AS	98684001	98117830
DPS 300SW	6.4	175 X 2	295	Model	DHO 080	SW6024	DSP20	DOT 20	DRSS 5K3	DRT-10	DSC	HY-1022
				Part No	98264700	98123000SW	98452120G	99065401AS	98600016	99016800AS	98684001	98117830
DPS 500SW	5.5	275 X 2	505	Model	DHO 120	SW9020	DPU-V20F8	DOT 60	DRSS 5K3	DRT-10	DSC	HY-1022
				Part No	98267700	98126000SW	98451700	98500300AS	98600016	99016800AS	98684001	98117830
DPS 700SW	7.6	325 X 2	704	Model	DHO 160	SW9028	DPU-V20F8	DOT 60	DRSS 5K3	DRT-10	DSC	HY-1022
				Part No	98269700	98129000SW	98451700	98500300AS	98600016	99016800AS	98684001	98117830

※ When purchasing a solenoid valve, please refer to page 62 and purchase two T-type nipples.

POWER STEERING SYSTEM

6-2 SINGLE HANDLE / TWO RUDDERS TWIN CYLINDER

DIAGRAM

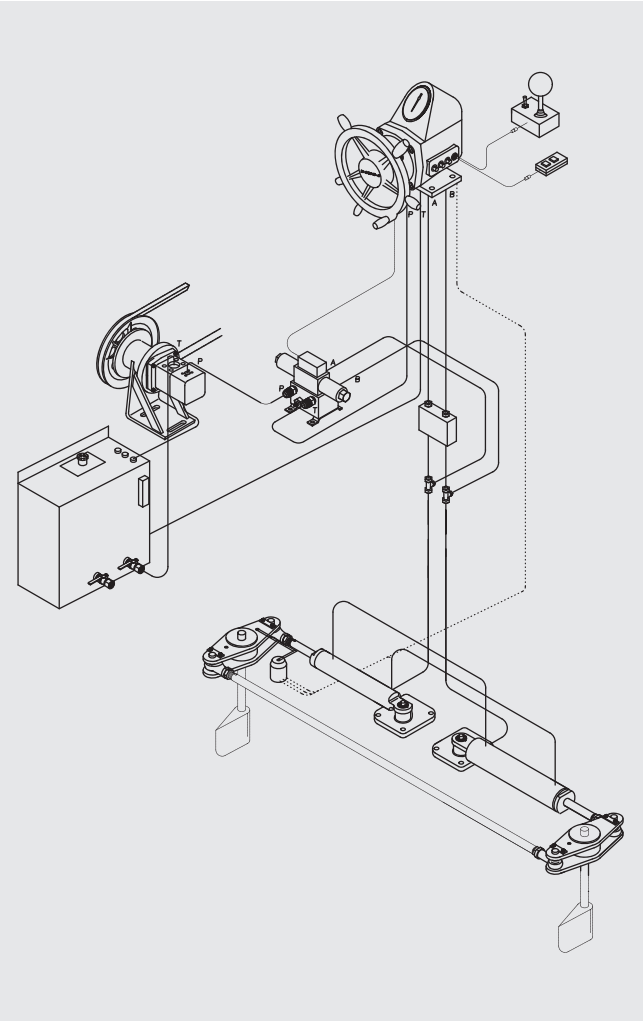

COMPONENTS

HANDLE UNIT

CYLINDER GROUP

PUMP DRIVE PULLEY

OIL TANK

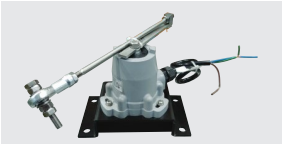

RUDDER ANGLE SENSOR

OPTION

SOLENOID BLOCK

CONTROL BOX

SWITCH

MODEL	NUMBER OF TURNS LOCK TO LOCK (74°)	ENGINE HP	MAX. TORQUE (kgf·m)	DIVISION	HANDLE UNIT	CYLINDER GROUP	PUMP DRIVE PULLEY	OIL TANK	RUDDER ANGLE SENSOR	OPTION		
										SOLENOID BLOCK	CONTROL BOX	SWITCH
DPS 351TW	5	200 X 2	348	Model	DHO 120	TW5019	DSP20	DOT 20	DRSS 5K2	DRT-10	DSC	HY-1022
				Part No	98267700	98161000TW	98452120G	99065401AS	98600009	99016800AS	98684001	98117830
DPS 651TW	7.1	300 X 2	654	Model	DHO 160	TW6024	DPU-V20F8	DOT 60	DRSS 5K3	DRT-10	DSC	HY-1022
				Part No	98269700	98164000TW	98451700	98500300AS	98600016	99016800AS	98684001	98117830
DPS 1200TW	8.2	500 X 2	1236	Model	DHO 277	TW9020	DP-V20F11	DOT 60	DRSS 5K3	DRT-10	DSC	HY-1022
				Part No	98276700	98167000TW	98453700	98500300AS	98600016	99016800AS	98684001	98117830
DPS 1600TW	10.8	600 X 2	1723	Model	DHO 277	TW9028	DP-V20F11	DOT 60	DRSS 5K4	DRT-10	DSC	HY-1022
				Part No	98276700	98170000TW	98453700	98500300AS	98600018	99016800AS	98684001	98117830
DPS 2000TW	13.3	900 X 2	2135	Model	DHO 277	TW10028	DP-V20F11	DOT 60	DRSS 5K4	DRT-10	DSC	HY-1022
				Part No	98276700	98173000TW	98453700	98500300AS	98600018	99016800AS	98684001	98117830

※ When purchasing a solenoid valve, please refer to page 62 and purchase two T-type nipples.

7-1 TWO HANDLE POWER STEERING SYSTEM DIAGRAM

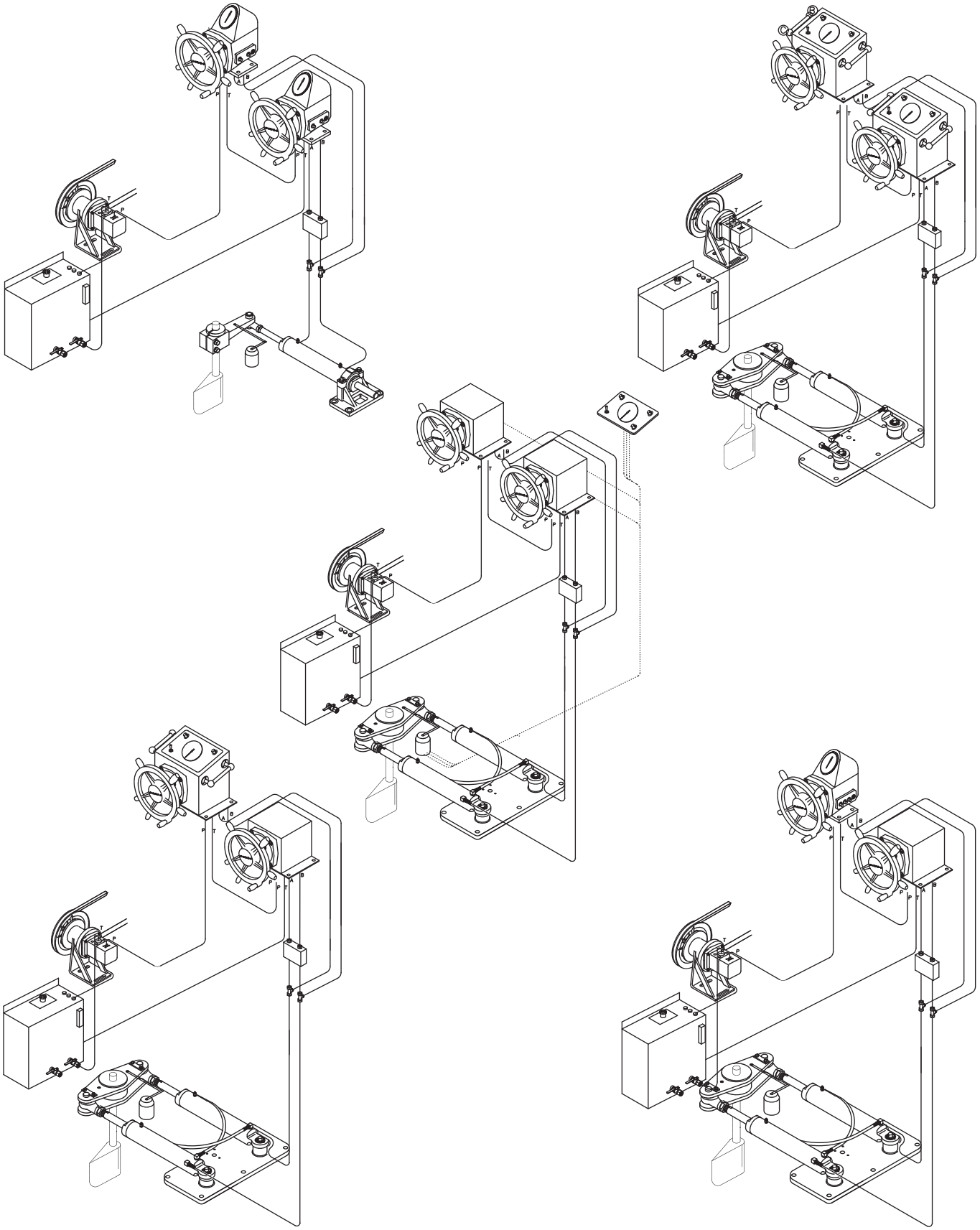

※ Please purchase two nipples(for power handle) by referring page 62.
※ Please purchase a lock valve by referring page 61.

8-1 ELECTRONIC HANDLE / ONE RUDDER SINGLE CYLINDER

DIAGRAM

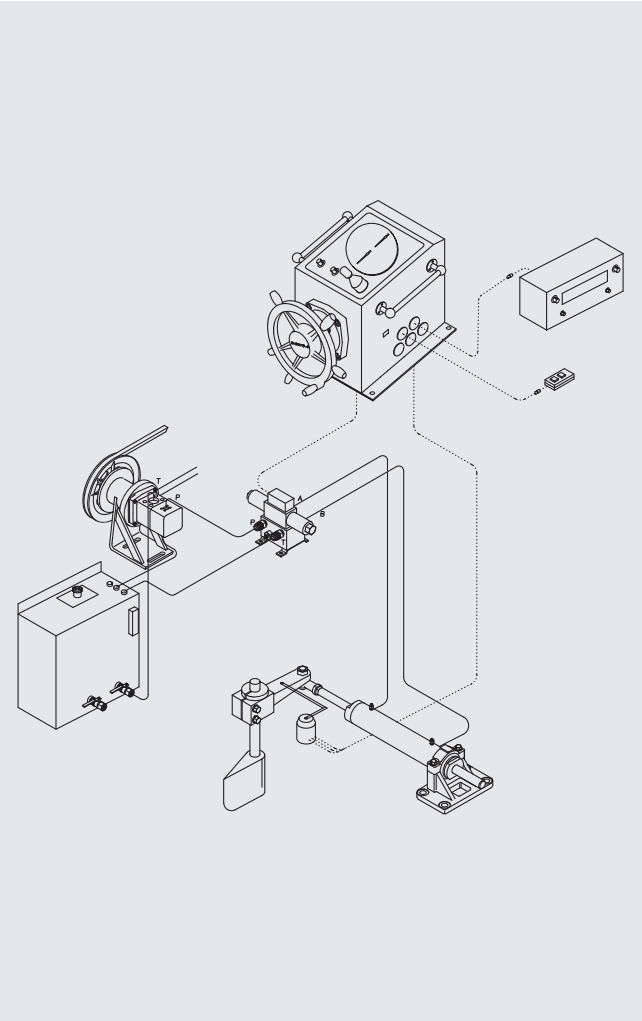

COMPONENTS

ELECTRONIC HANDLE UNIT

CYLINDER GROUP

PUMP DRIVE PULLEY

OIL TANK

RUDDER ANGLE SENSOR

SOLENOID BLOCK

OPTION

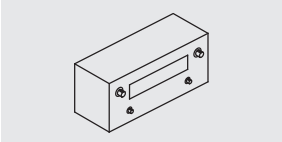

APS

SYSTEM MODEL	NUMBER OF TURNS LOCK TO LOCK (74º)	ENGINE HP	MAX. TORQUE (kgf·m)	DIVISION	COMPONENTS						OPTION
					ELECTRONIC HANDLE UNIT	CYLINDER GROUP	PUMP DRIVE PULLEY	OIL TANK	RUDDER ANGLE SENSOR	SOLENOID BLOCK	APS
DES 130S	3	180	128	MODEL	DEH 100	S5015	DSP20	DOT 20	DRSA 5K1	DRT 20	-
				PART NO	98250000	98111000S	98452120G	99065401AS	98600006	98117900AS	-
DES 160S	3	250	159	MODEL	DEH 100	S5019	DSP20	DOT 20	DRSA 5K1	DRT 20	-
				PART NO	98250000	98114000S	98452120G	99065401AS	98600006	98117900AS	-
DES 300S	3	350	295	MODEL	DEH 100	S6024	DSP20	DOT 20	DRSA 5K3	DRT 20	-
				PART NO	98250000	98123000S	98452120G	99065401AS	98600014	98117900AS	-
DES 500S	3	550	505	MODEL	DEH 100	S9020	DPU-V20F8	DOT 60	DRSA 5K3	DRT 20	-
				PART NO	98250000	98126000S	98451700	98500300AS	98600014	98117900AS	-
DES 700S	3	650	704	MODEL	DEH 100	S9028	DPU-V20F8	DOT 60	DRSA 5K3	DRT 20	-
				PART NO	98250000	98129000S	98451700	98500300AS	98600014	98117900AS	-

8-2 EELECTRONIC HANDLE / ROTARY CYLINDER

DIAGRAM

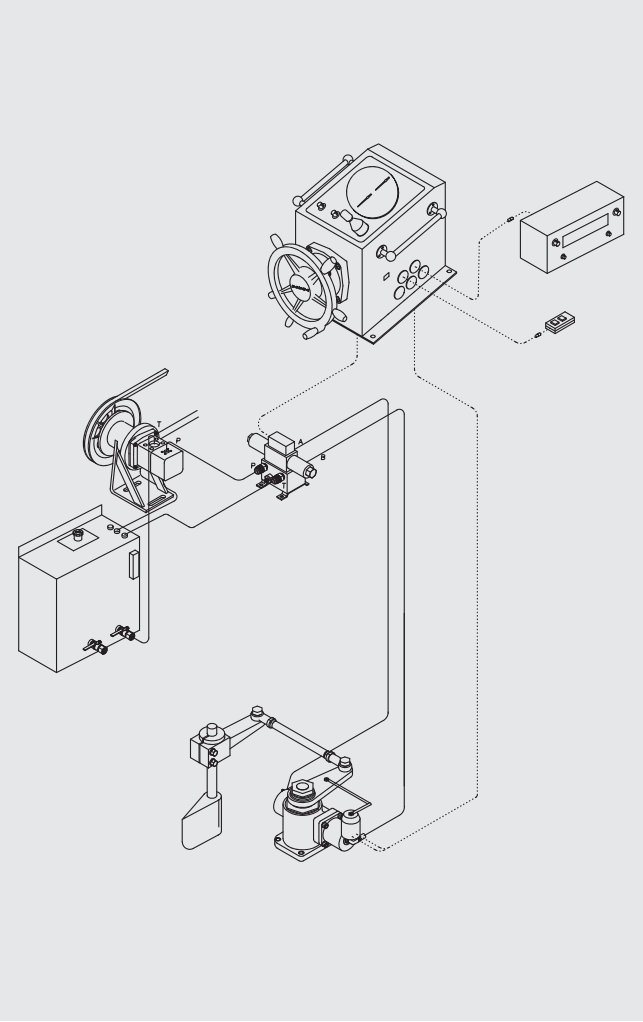

COMPONENTS

ELECTRONIC HANDLE UNIT

CYLINDER GROUP

PUMP DRIVE PULLEY

OIL TANK

RUDDER ANGLE SENSOR

SOLENOID BLOCK

OPTION

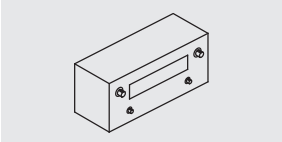

APS

SYSTEM MODEL	NUMBER OF TURNS LOCK TO LOCK (74º)	ENGINE HP	MAX. TORQUE (kgf·m)	DIVISION	COMPONENTS						OPTION
					ELECTRONIC HANDLE UNIT	CYLINDER GROUP	PUMP DRIVE PULLEY	OIL TANK	RUDDER ANGLE SENSOR	SOLENOID BLOCK	APS
DES 160R	3	250	169	MODEL	DEH 100	R160	DSP20	DOT 20	DRSA 5K5	DRT 20	-
				PART NO	98250000	98117000P	98452120G	99065401AS	98600022	98117900AS	-

8-3 ELECTRONIC HANDLE / ONE RUDDER TWIN CYLINDER

DIAGRAM

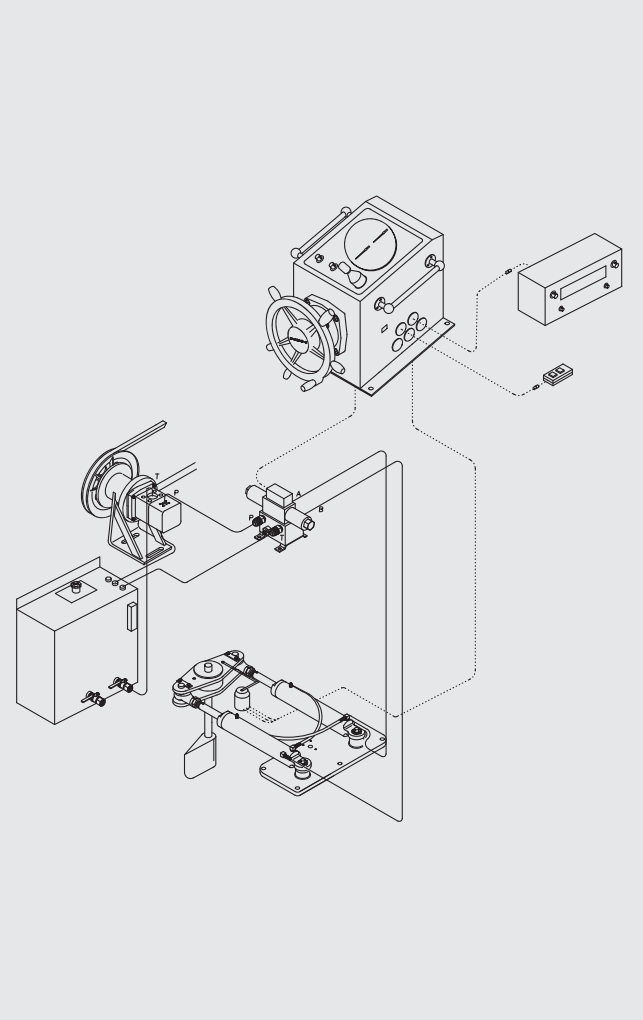

COMPONENTS

ELECTRONIC HANDLE UNIT

CYLINDER GROUP

PUMP DRIVE PULLEY

OIL TANK

RUDDER ANGLE SENSOR

SOLENOID BLOCK

OPTION

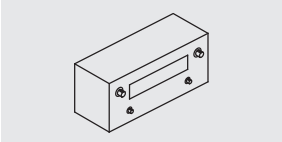

APS

SYSTEM MODEL	NUMBER OF TURNS LOCK TO LOCK (74º)	ENGINE HP	MAX. TORQUE (kgf·m)	DIVISION	COMPONENTS						OPTION
					ELECTRONIC HANDLE UNIT	CYLINDER GROUP	PUMP DRIVE PULLEY	OIL TANK	RUDDER ANGLE SENSOR	SOLENOID BLOCK	APS
DES 351T	3	400	348	MODEL	DEH 100	T5019	DSP20	DOT 20	DRSA 5K2	DRT 20	-
				PART NO	98250000	98161000T	98452120G	99065401AS	98600010	98117900AS	-
DES 651T	3	600	654	MODEL	DEH 100	T6024	DPU-V20F8	DOT 60	DRSA 5K3	DRT 20	-
				PART NO	98250000	98164000T	98451700	98500300AS	98600014	98117900AS	-
DES 1200T	3	100	1,236	MODEL	DEH 100	T9020	DPU-V20F11	DOT 60	DRSA 5K3	DRT 20	-
				PART NO	98250000	98167000T	98453700	98500300AS	98600014	98117900AS	-
DES 1600T	3	1200	1,723	MODEL	DEH 100	T9028	DPU-V20F11	DOT 60	DRSA 5K4	DRT 20	-
				PART NO	98250000	98170000T	98453700	98500300AS	98600019	98117900AS	-
DES 2000T	3	1800	2,135	MODEL	DEH 100	T10028	DPU-V20F11	DOT 60	DRSA 5K4	DRT 20	-
				PART NO	98250000	98173000T	98453700	98500300AS	98600019	98117900AS	-

ELECTRONIC STEERING SYSTEM

9-1 ELECTRONIC HANDLE / TWO RUDDERS SINGLE CYLINDER

DIAGRAM

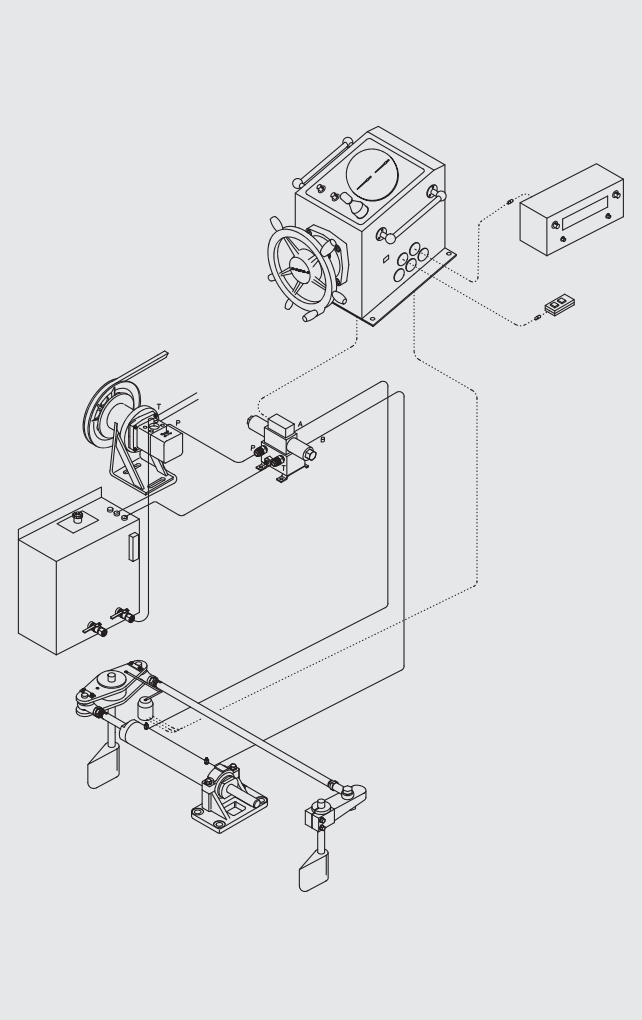

COMPONENTS

ELECTRONIC HANDLE UNIT

CYLINDER GROUP

PUMP DRIVE PULLEY

OIL TANK

RUDDER ANGLE SENSOR

SOLENOID BLOCK

OPTION

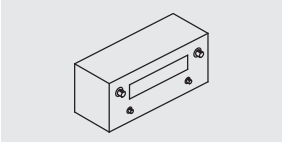

APS

SYSTEM MODEL	NUMBER OF TURNS LOCK TO LOCK (74º)	ENGINE HP	MAX. TORQUE (kgf·m)	DIVISION	COMPONENTS						OPTION
					ELECTRONIC HANDLE UNIT	CYLINDER GROUP	PUMP DRIVE PULLEY	OIL TANK	RUDDER ANGLE SENSOR	SOLENOID BLOCK	APS
DES 130SW	3	90 x 2	159	MODEL	DEH 100	SW5015	DSP20	DOT 20	DRSA 5K1	DRT 20	-
				PART NO	98250000	98111000SW	98452120G	99065401AS	98600006	98117900AS	-
DES 200SW	3	125 x 2	295	MODEL	DEH 100	SW6024	DSP20	DOT 20	DRSA 5K3	DRT 20	-
				PART NO	98250000	98123000SW	98452120G	99065401AS	98600014	98117900AS	-
DES 500SW	3	175 x 2	505	MODEL	DEH 100	SW9020	DPU-V20F8	DOT 60	DRSA 5K3	DRT 20	-
				PART NO	98250000	98126000SW	98451700	98500300AS	98600014	98117900AS	-
DES 700SW	3	275 x 2	704	MODEL	DEH 100	SW9028	DPU-V20F8	DOT 60	DRSA 5K3	DRT 20	-
				PART NO	98250000	98129000SW	98451700	98500300AS	98600014	98117900AS	-

ELECTRONIC STEERING SYSTEM

9-2 ELECTRONIC HANDLE / TWO RUDDERS TWIN CYLINDER

DIAGRAM

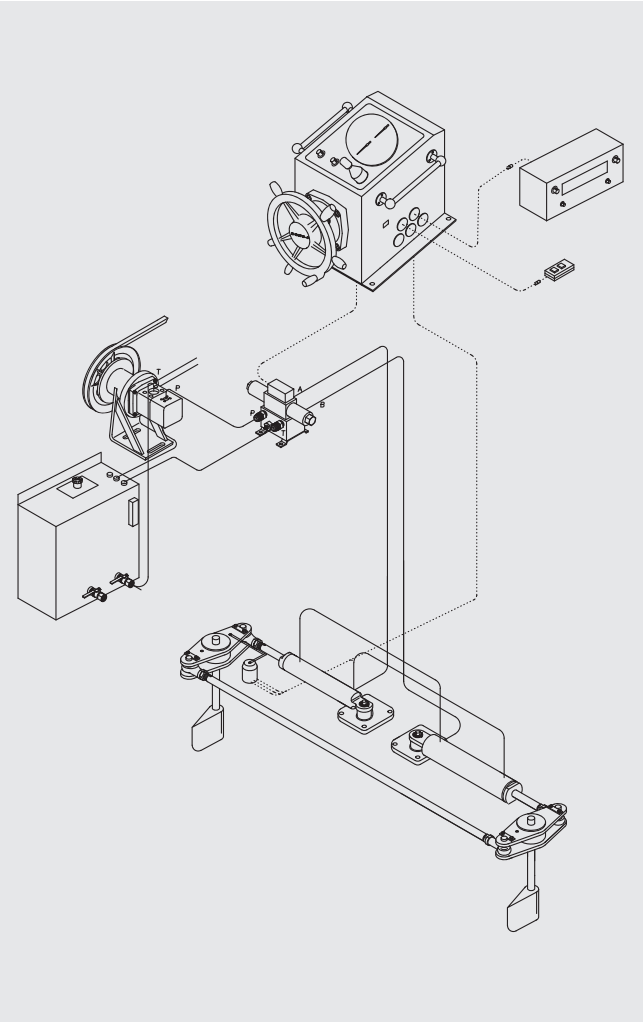

COMPONENTS

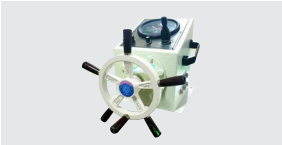

ELECTRONIC HANDLE UNIT

CYLINDER GROUP

PUMP DRIVE PULLEY

OIL TANK

RUDDER ANGLE SENSOR

SOLENOID BLOCK

OPTION

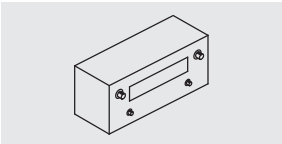

APS

SYSTEM MODEL	NUMBER OF TURNS LOCK TO LOCK (74º)	ENGINE HP	MAX. TORQUE (kgf·m)	DIVISION	COMPONENTS						OPTION
					ELECTRONIC HANDLE UNIT	CYLINDER GROUP	PUMP DRIVE PULLEY	OIL TANK	RUDDER ANGLE SENSOR	SOLENOID BLOCK	APS
DES 351TW	3	200X2	348	MODEL	DEH 100	TW5019	DSP20	DOT 20	DRSA 5K2	DRT 20	-
				PART NO	98250000	98161000TW	98452120G	99065401AS	98600010	98117900AS	-
DES 651TW	3	300X2	654	MODEL	DEH 100	TW6024	DPU-V20F8	DOT 60	DRSA 5K3	DRT 20	-
				PART NO	98250000	98164000TW	98451700	98500300AS	98600014	98117900AS	-
DES 1200TW	3	500X2	1,236	MODEL	DEH 100	TW9020	DPU-V20F11	DOT 60	DRSA 5K3	DRT 20	-
				PART NO	98250000	98167000TW	98453700	98500300AS	98600014	98117900AS	-
DES 1600TW	3	600X2	1,723	MODEL	DEH 100	TW9028	DPU-V20F11	DOT 60	DRSA 5K4	DRT 20	-
				PART NO	98250000	98170000TW	98453700	98500300AS	98600019	98117900AS	-
DES 2000TW	3	900X2	2,135	MODEL	DEH 100	TW10028	DPU-V20F11	DOT 60	DRSA 5K4	DRT 20	-
				PART NO	98250000	98173000TW	98453700	98500300AS	98600019	98117900AS	-

ELECTRONIC STEERING SYSTEM (POWER UNIT)

10-1 ELECTRONIC HANDLE UNIT / ONE RUDDER TWIN CYLINDER / POWER UNIT (SINGLE MOTOR)

DIAGRAM

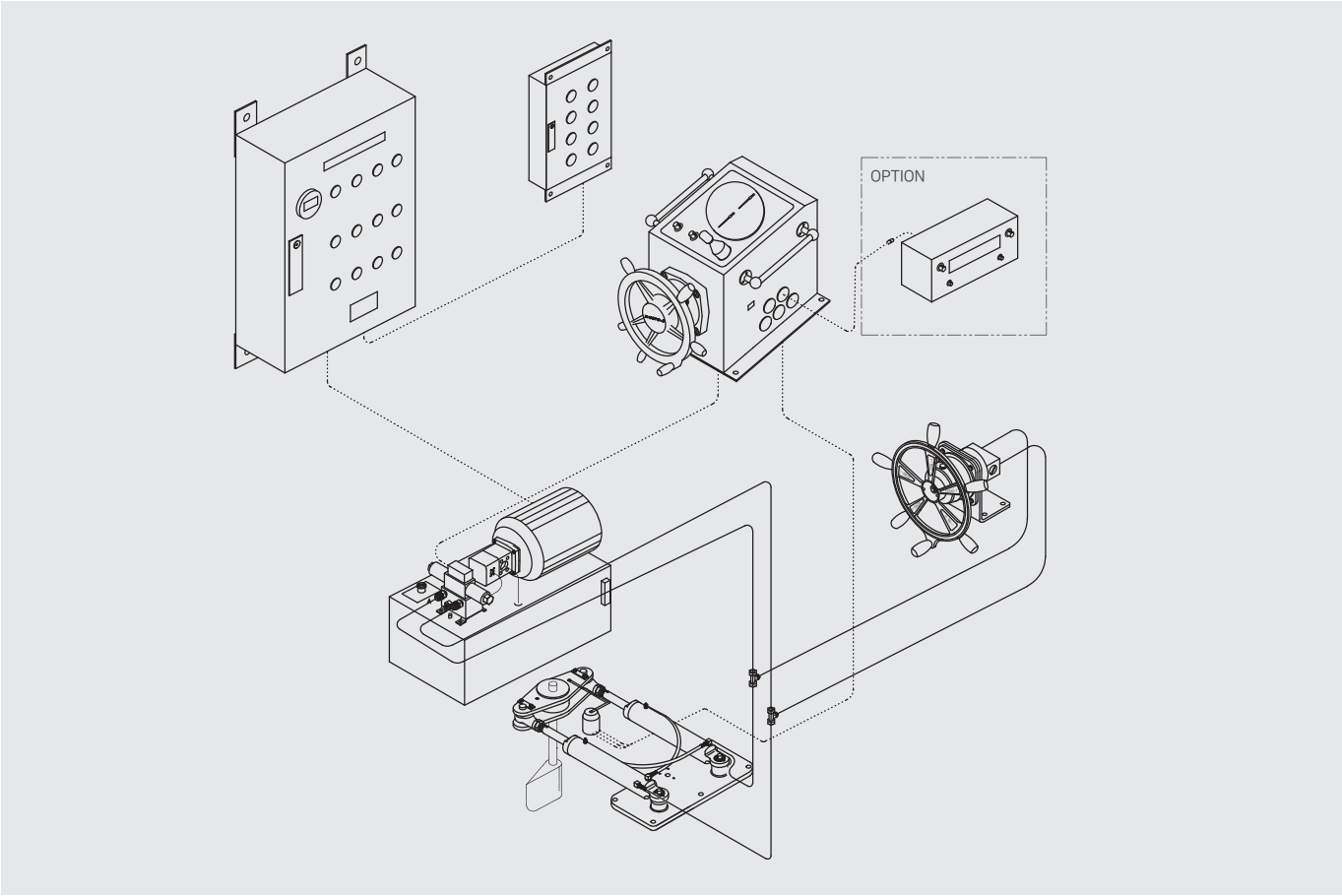

COMPONENTS

ELECTRONIC HANDLE UNIT

CYLINDER GROUP

ALARM BOX

POWER UNIT

RUDDER ANGLE SENSOR

EMERGENCY HANDLE

STEERING SYSTEM CONTROL PANEL

OPTION

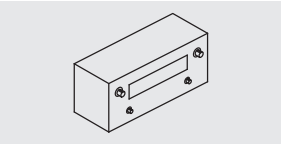

APS

※ Please purchase two emergency nipples by referring page 62.

ELECTRONIC STEERING SYSTEM (POWER UNIT)

10-1 ELECTRONIC HANDLE UNIT / ONE RUDDER TWIN CYLINDER / POWER UNIT (SINGLE MOTOR)

POWER : 60Hz

Sol : 24V

SYSTEM MODEL	NUMBER OF TURNS LOCK TO LOCK (74º)	ENGINE HP	MAX. TORQUE (kgf·m)	DIVISION	COMPONENTS							POWER UNIT STANDARD (VOLTAGE)
					ELECTRONIC HANDLE UNIT	CYLINDER GROUP	RUDDER ANGLE SENSOR	POWER UNIT	ALARM BOX	STEERING SYSTEM CONTROL PANEL	EMERGENCY HANDLE	
EDPS 351T	3	400	348	MODEL	DEH 100	T5019	DRSA 5K2	SP222EH2.2M1	SB122622D	SCP1	DHM 044	220V
				PART NO	98250000	98161000T	98600010	SP222EH2.2M1	98801101	98801600	98114103E	
EDPS 651T	3	600	654	MODEL	DEH 100	T6024	DRSA 5K3	SP222EH2.2M1	SB122622D	SCP1	DHM 044	220V
				PART NO	98250000	98164000T	98600014	SP222EH2.2M1	98801101	98801600	98114103E	
EDPS 1200T	3	1,000	1,236	MODEL	DEH 100	T9020	DRSA 5K3	SP223EH3.7M1	SB137622D	SCP1	DHM 044	220V
				PART NO	98250000	98167000T	98600014	SP223EH3.7M1	98801105	98801600	98114103E	
EDPS 1600T	3	1,200	1,723	MODEL	DEH 100	T9028	DRSA 5K4	SP224EH3.7M1	SB137622D	SCP1	DHM 044	220V
				PART NO	98250000	98170000T	98600019	SP224EH3.7M1	98801105	98801600	98114103E	
EDPS 2000T	3	1,800	2,135	MODEL	DEH 100	T10028	DRSA 5K4	SP224EH3.7M1	SB137622D	SCP1	DHM 044	220V
				PART NO	98250000	98173000T	98600019	SP224EH3.7M1	98801105	98801600	98114103E	
EDPS 3500T	3		3,503	MODEL	DEH 100	T12034	DRSA 5K4	SP224EH3.7M1	SB137622D	SCP1	DHM 044	220V
				PART NO	98250000	98190000T	98600019	SP224EH3.7M1	98801105	98801600	98114103E	
EDPS 351T	3	400	348	MODEL	DEH 100	T5019	DRSA 5K2	SP382EH2.2M1	SB122638D	SCP1	DHM 044	380V
				PART NO	98250000	98161000T	98600010	SP382EH2.2M1	98801102	98801600	98114103E	
EDPS 651T	3	600	654	MODEL	DEH 100	T6024	DRSA 5K3	SP382EH2.2M1	SB122638D	SCP1	DHM 044	380V
				PART NO	98250000	98164000T	98600014	SP382EH2.2M1	98801102	98801600	98114103E	
EDPS 1200T	3	1,000	1,236	MODEL	DEH 100	T9020	DRSA 5K3	SP383EH3.7M1	SB137638D	SCP1	DHM 044	380V
				PART NO	98250000	98167000T	98600014	SP383EH3.7M1	98801106	98801600	98114103E	
EDPS 1600T	3	1,200	1,723	MODEL	DEH 100	T9028	DRSA 5K4	SP384EH3.7M1	SB137638D	SCP1	DHM 044	380V
				PART NO	98250000	98170000T	98600019	SP384EH3.7M1	98801106	98801600	98114103E	
EDPS 2000T	3	1,800	2,135	MODEL	DEH 100	T10028	DRSA 5K4	SP384EH3.7M1	SB137638D	SCP1	DHM 044	380V
				PART NO	98250000	98173000T	98600019	SP384EH3.7M1	98801106	98801600	98114103E	
EDPS 3500T	3	-	3,503	MODEL	DEH 100	T12034	DRSA 5K4	SP384EH3.7M1	SB137638D	SCP1	DHM 044	380V
				PART NO	98250000	98190000T	98600019	SP384EH3.7M1	98801106	98801600	98114103E	

POWER : 50Hz

Sol : 24V

SYSTEM MODEL	NUMBER OF TURNS LOCK TO LOCK (74º)	ENGINE HP	MAX. TORQUE (kgf·m)	DIVISION	COMPONENTS							POWER UNIT STANDARD (VOLTAGE)
					ELECTRONIC HANDLE UNIT	CYLINDER GROUP	RUDDER ANGLE SENSOR	POWER UNIT	ALARM BOX	STEERING SYSTEM CONTROL PANEL	EMERGENCY HANDLE	
EDPS 351T	3	400	348	MODEL	DEH 100	T5019	DRSA 5K2	SP223EH3.7M1	SB337522D	SCP1	DHM 044	220V
				PART NO	98250000	98161000T	98600010	SP223EH3.7M1	98801305	98801600	98114103E	
EDPS 651T	3	600	654	MODEL	DEH 100	T6024	DRSA 5K3	SP223EH3.7M1	SB337522D	SCP1	DHM 044	220V
				PART NO	98250000	98164000T	98600014	SP223EH3.7M1	98801305	98801600	98114103E	
EDPS 1200T	3	100	1,236	MODEL	DEH 100	T9020	DRSA 5K3	SP223EH3.7M1	SB337522D	SCP1	DHM 044	220V
				PART NO	98250000	98167000T	98600014	SP223EH3.7M1	98801305	98801600	98114103E	
EDPS 1600T	3	1200	1,723	MODEL	DEH 100	T9028	DRSA 5K4	SP224EH3.7M1	SB337522D	SCP1	DHM 044	220V
				PART NO	98250000	98170000T	98600019	SP224EH3.7M1	98801305	98801600	98114103E	
EDPS 2000T	3	1800	2,135	MODEL	DEH 100	T10028	DRSA 5K4	SP224EH3.7M1	SB337522D	SCP1	DHM 044	220V
				PART NO	98250000	98173000T	98600019	SP224EH3.7M1	98801305	98801600	98114103E	
EDPS 3500T	3		3,503	MODEL	DEH 100	T12034	DRSA 5K4	SP225EH5.5M1	SB455522D	SCP1	DHM 044	220V
				PART NO	98250000	98190000T	98600019	SP225EH5.5M1	98801401	98801600	98114103E	
EDPS 351T	3	400	348	MODEL	DEH 100	T5019	DRSA 5K2	SP383EH3.7M1	SB337538D	SCP1	DHM 044	380V
				PART NO	98250000	98161000T	98600010	SP383EH3.7M1	98801306	98801600	98114103E	
EDPS 651T	3	600	654	MODEL	DEH 100	T6024	DRSA 5K3	SP383EH3.7M1	SB337538D	SCP1	DHM 044	380V
				PART NO	98250000	98164000T	98600014	SP383EH3.7M1	98801306	98801600	98114103E	
EDPS 1200T	3	100	1,236	MODEL	DEH 100	T9020	DRSA 5K3	SP383EH3.7M1	SB337538D	SCP1	DHM 044	380V
				PART NO	98250000	98167000T	98600014	SP383EH3.7M1	98801306	98801600	98114103E	
EDPS 1600T	3	1200	1,723	MODEL	DEH 100	T9028	DRSA 5K4	SP384EH3.7M1	SB337538D	SCP1	DHM 044	380V
				PART NO	98250000	98170000T	98600019	SP384EH3.7M1	98801306	98801600	98114103E	
EDPS 2000T	3	1800	2,135	MODEL	DEH 100	T10028	DRSA 5K4	SP384EH3.7M1	SB337538D	SCP1	DHM 044	380V
				PART NO	98250000	98173000T	98600019	SP384EH3.7M1	98801306	98801600	98114103E	
EDPS 3500T	3		3,503	MODEL	DEH 100	T12034	DRSA 5K4	SP385EH5.5M1	SB455538D	SCP1	DHM 044	380V
				PART NO	98250000	98190000T	98600019	SP385EH5.5M1	98801402	98801600	98114103E	

※ If you want to use motor voltage 400V or 440V, please refer to page 57, 58.
※ If you want to use solenoid valve voltage DC 12V, AC 110V, please contact our sales team.

ELECTRONIC STEERING SYSTEM (POWER UNIT)

10-2 ELECTRONIC HANDLE UNIT / ONE RUDDERS TWIN CYLINDERS / POWER UNIT (EMERGENCY)

DIAGRAM

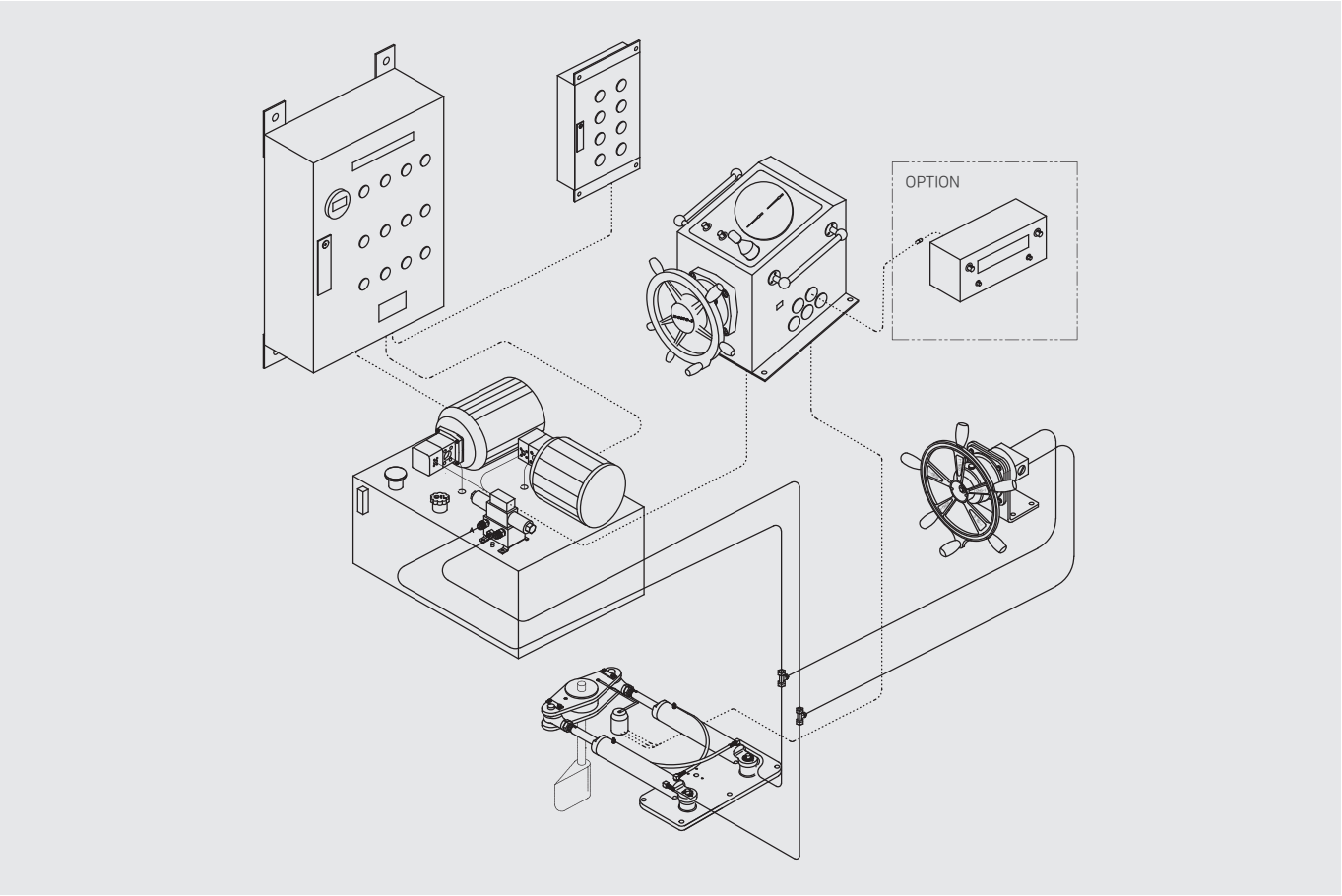

COMPONENTS

ELECTRONIC HANDLE UNIT

CYLINDER GROUP

ALARM BOX

POWER UNIT

RUDDER ANGLE SENSOR

EMERGENCY HANDLE

STEERING SYSTEM CONTROL PANEL

OPTION

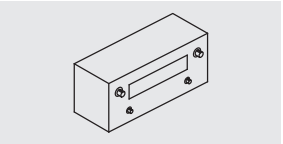

APS

※ Please purchase two emergency nipples by referring page 62.

ELECTRONIC STEERING SYSTEM (POWER UNIT)

10-2 ELECTRONIC HANDLE UNIT / ONE RUDDERS TWIN CYLINDERS / POWER UNIT (EMERGENCY)

POWER : 60Hz

Sol : 24V

SYSTEM MODEL	NUMBER OF TURNS LOCK TO LOCK (74º)	ENGINE HP	MAX. TORQUE (kgf·m)	DIVISION	COMPONENTS							POWER UNIT STANDARD (VOLTAGE)
					ELECTRONIC HANDLE UNIT	CYLINDER GROUP	RUDDER ANGLE SENSOR	POWER UNIT	ALARM BOX	STEERING SYSTEM CONTROL PANEL	EMERGENCY HANDLE	
EDPS 351T	3	400	348	MODEL	DEH 100	T5019	DRSA 5K2	SP222EH2.2M2	SB122622D	SCP1	DHM 044	220V
				PART NO	98250000	98161000T	98600010	SP222EH2.2M2	98801101	98801600	98114103E	
EDPS 651T	3	600	654	MODEL	DEH 100	T6024	DRSA 5K3	SP222EH2.2M2	SB122622D	SCP1	DHM 044	220V
				PART NO	98250000	98164000T	98600014	SP222EH2.2M2	98801101	98801600	98114103E	
EDPS 1200T	3	1,000	1,236	MODEL	DEH 100	T9020	DRSA 5K3	SP223EH3.7M2	SB137622D	SCP1	DHM 044	220V
				PART NO	98250000	98167000T	98600014	SP223EH3.7M2	98801105	98801600	98114103E	
EDPS 1600T	3	1,200	1,723	MODEL	DEH 100	T9028	DRSA 5K4	SP224EH3.7M2	SB137622D	SCP1	DHM 044	220V
				PART NO	98250000	98170000T	98600019	SP224EH3.7M2	98801105	98801600	98114103E	
EDPS 2000T	3	1,800	2,135	MODEL	DEH 100	T10028	DRSA 5K4	SP224EH3.7M2	SB137622D	SCP1	DHM 044	220V
				PART NO	98250000	98173000T	98600019	SP224EH3.7M2	98801105	98801600	98114103E	
EDPS 3500T	3		3,503	MODEL	DEH 100	T12034	DRSA 5K4	SP224EH3.7M2	SB137622D	SCP1	DHM 044	220V
				PART NO	98250000	98190000T	98600019	SP224EH3.7M2	98801105	98801600	98114103E	
EDPS 351T	3	400	348	MODEL	DEH 100	T5019	DRSA 5K2	SP382EH2.2M2	SB122638D	SCP1	DHM 044	380V
				PART NO	98250000	98161000T	98600010	SP382EH2.2M2	98801102	98801600	98114103E	
EDPS 651T	3	600	654	MODEL	DEH 100	T6024	DRSA 5K3	SP382EH2.2M2	SB122638D	SCP1	DHM 044	380V
				PART NO	98250000	98164000T	98600014	SP382EH2.2M2	98801102	98801600	98114103E	
EDPS 1200T	3	1,000	1,236	MODEL	DEH 100	T9020	DRSA 5K3	SP383EH3.7M2	SB137638D	SCP1	DHM 044	380V
				PART NO	98250000	98167000T	98600014	SP383EH3.7M2	98801106	98801600	98114103E	
EDPS 1600T	3	1,200	1,723	MODEL	DEH 100	T9028	DRSA 5K4	SP384EH3.7M2	SB137638D	SCP1	DHM 044	380V
				PART NO	98250000	98170000T	98600019	SP384EH3.7M2	98801106	98801600	98114103E	
EDPS 2000T	3	1,800	2,135	MODEL	DEH 100	T10028	DRSA 5K4	SP384EH3.7M2	SB137638D	SCP1	DHM 044	380V
				PART NO	98250000	98173000T	98600019	SP384EH3.7M2	98801106	98801600	98114103E	
EDPS 3500T	3	-	2,135	MODEL	DEH 100	T12034	DRSA 5K4	SP384EH3.7M2	SB137638D	SCP1	DHM 044	380V
				PART NO	98250000	98190000T	98600019	SP384EH3.7M2	98801106	98801600	98114103E	

POWER : 50Hz

Sol : 24V

SYSTEM MODEL	NUMBER OF TURNS LOCK TO LOCK (74º)	ENGINE HP	MAX. TORQUE (kgf·m)	DIVISION	COMPONENTS							POWER UNIT STANDARD (VOLTAGE)
					ELECTRONIC HANDLE UNIT	CYLINDER GROUP	RUDDER ANGLE SENSOR	POWER UNIT	ALARM BOX	STEERING SYSTEM CONTROL PANEL	EMERGENCY HANDLE	
EDPS 351T	3	400	348	MODEL	DEH 100	T5019	DRSA 5K2	SP223EH3.7M2	SB337522D	SCP1	DHM 044	220V
				PART NO	98250000	98161000T	98600010	SP223EH3.7M2	98801305	98801600	98114103E	
EDPS 651T	3	600	654	MODEL	DEH 100	T6024	DRSA 5K3	SP223EH3.7M2	SB337522D	SCP1	DHM 044	220V
				PART NO	98250000	98164000T	98600014	SP223EH3.7M2	98801305	98801600	98114103E	
EDPS 1200T	3	100	1,236	MODEL	DEH 100	T9020	DRSA 5K3	SP223EH3.7M2	SB337522D	SCP1	DHM 044	220V
				PART NO	98250000	98167000T	98600014	SP223EH3.7M2	98801305	98801600	98114103E	
EDPS 1600T	3	1200	1,723	MODEL	DEH 100	T9028	DRSA 5K4	SP224EH3.7M2	SB337522D	SCP1	DHM 044	220V
				PART NO	98250000	98170000T	98600019	SP224EH3.7M2	98801305	98801600	98114103E	
EDPS 2000T	3	1800	2,135	MODEL	DEH 100	T10028	DRSA 5K4	SP224EH3.7M2	SB337522D	SCP1	DHM 044	220V
				PART NO	98250000	98173000T	98600019	SP224EH3.7M2	98801305	98801600	98114103E	
EDPS 3500T	3		3,503	MODEL	DEH 100	T12034	DRSA 5K4	SP225EH5.5M2	SB455522D	SCP1	DHM 044	220V
				PART NO	98250000	98190000T	98600019	SP225EH5.5M2	98801401	98801600	98114103E	
EDPS 351T	3	400	348	MODEL	DEH 100	T5019	DRSA 5K2	SP383EH3.7M2	SB337538D	SCP1	DHM 044	380V
				PART NO	98250000	98161000T	98600010	SP383EH3.7M2	98801306	98801600	98114103E	
EDPS 651T	3	600	654	MODEL	DEH 100	T6024	DRSA 5K3	SP383EH3.7M2	SB337538D	SCP1	DHM 044	380V
				PART NO	98250000	98164000T	98600014	SP383EH3.7M2	98801306	98801600	98114103E	
EDPS 1200T	3	100	1,236	MODEL	DEH 100	T9020	DRSA 5K3	SP383EH3.7M2	SB337538D	SCP1	DHM 044	380V
				PART NO	98250000	98167000T	98600014	SP383EH3.7M2	98801306	98801600	98114103E	
EDPS 1600T	3	1200	1,723	MODEL	DEH 100	T9028	DRSA 5K4	SP384EH3.7M2	SB337538D	SCP1	DHM 044	380V
				PART NO	98250000	98170000T	98600019	SP384EH3.7M2	98801306	98801600	98114103E	
EDPS 2000T	3	1800	2,135	MODEL	DEH 100	T10028	DRSA 5K4	SP384EH3.7M2	SB337538D	SCP1	DHM 044	380V
				PART NO	98250000	98173000T	98600019	SP384EH3.7M2	98801306	98801600	98114103E	
EDPS 3500T	3		3,503	MODEL	DEH 100	T12034	DRSA 5K4	SP385EH5.5M2	SB455538D	SCP1	DHM 044	380V
				PART NO	98250000	98190000T	98600019	SP385EH5.5M2	98801402	98801600	98114103E	

※ If you want to use motor voltage 400V or 440V, please refer to page 57, 58.
※ If you want to use solenoid valve voltage DC 12V, AC 110V, please contact our sales team.

ELECTRONIC STEERING SYSTEM (POWER UNIT)

10-3 ELECTRONIC HANDLE UNIT / ONE RUDDERS TWIN CYLINDERS / DOUBLE POWER UNIT

DIAGRAM

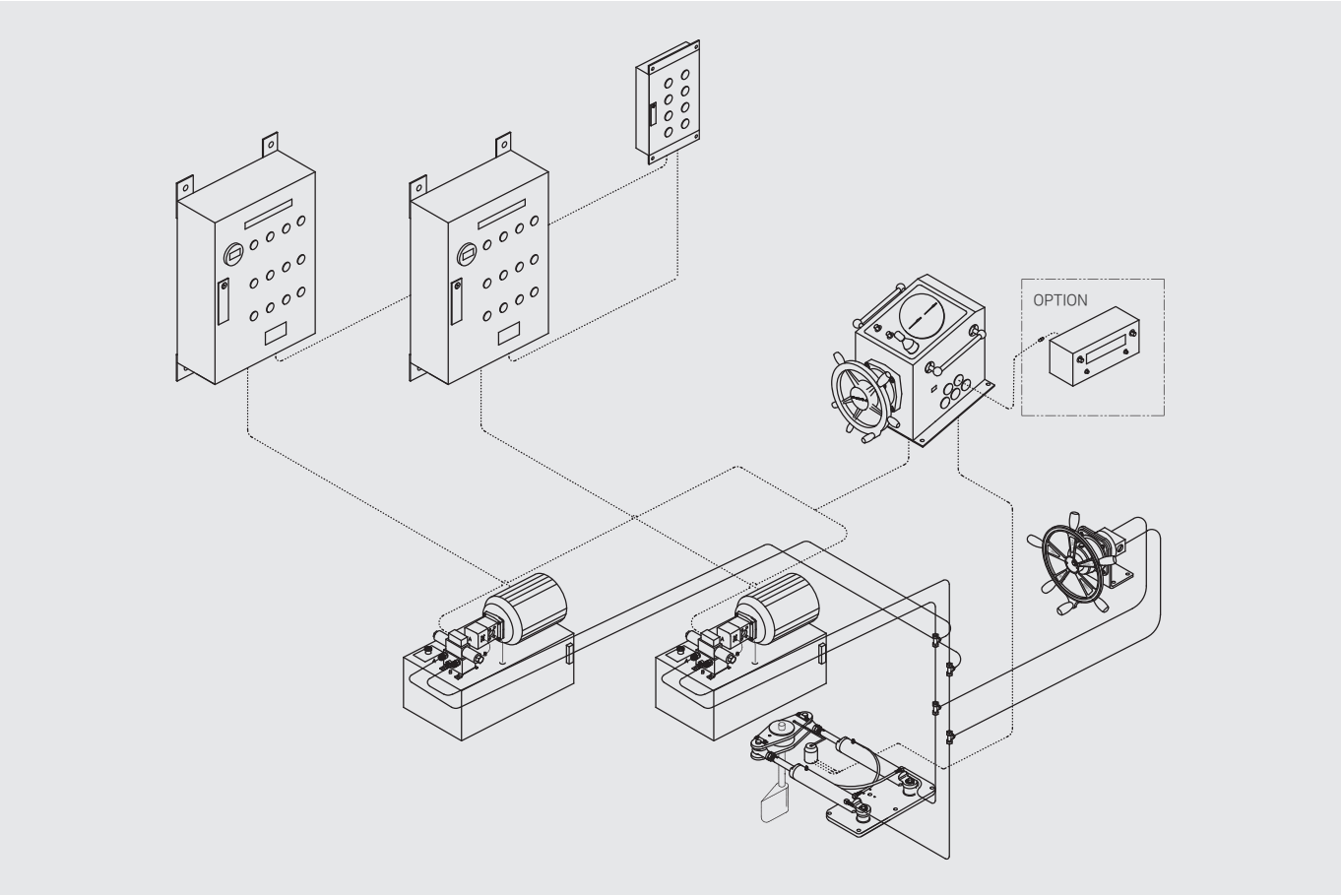

COMPONENTS

ELECTRONIC HANDLE UNIT

CYLINDER GROUP

ALARM BOX

POWER UNIT

RUDDER ANGLE SENSOR

EMERGENCY HANDLE

STEERING SYSTEM CONTROL PANEL

OPTION

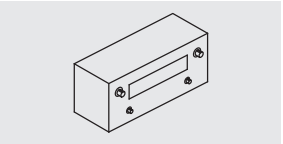

APS

※ Please purchase two emergency nipples by referring page 62.
※ For this system, please purchase 2 power units and 2 alarm boxes.

ELECTRONIC STEERING SYSTEM (POWER UNIT)

10-3 ELECTRONIC HANDLE UNIT / ONE RUDDERS TWIN CYLINDERS / DOUBLE POWER UNIT

POWER : 60Hz

Sol : 24V

SYSTEM MODEL	NUMBERS OF TURNS LOCK TO LOCK (74º)	ENGINE HP	MAX. TORQUE (kgf·m)	DIVISION	COMPONENTS							POWER UNIT STANDARD (VOLTAGE)
					ELECTRONIC HANDLE UNIT	CYLINDER GROUP	RUDDER ANGLE SENSOR	POWER UNIT	ALARM BOX	STEERING SYSTEM CONTROL PANEL	EMERGENCY HANDLE	
EDPS 351T	3	400	348	MODEL	DEH 100	T5019	DRSA 5K2	SP222EH2.2M1	SB122622D	SCP2	DHM 044	220V
				PART NO	98250000	98161000T	98600010	SP222EH2.2M1	98801101	98801700	98114103E	
EDPS 651T	3	600	654	MODEL	DEH 100	T6024	DRSA 5K3	SP222EH2.2M1	SB122622D	SCP2	DHM 044	220V
				PART NO	98250000	98164000T	98600014	SP222EH2.2M1	98801101	98801700	98114103E	
EDPS 1200T	3	100	1,236	MODEL	DEH 100	T9020	DRSA 5K3	SP223EH3.7M1	SB137622D	SCP2	DHM 044	220V
				PART NO	98250000	98167000T	98600014	SP223EH3.7M1	98801105	98801700	98114103E	
EDPS 1600T	3	1,200	1,723	MODEL	DEH 100	T9028	DRSA 5K4	SP224EH3.7M1	SB137622D	SCP2	DHM 044	220V
				PART NO	98250000	98170000T	98600019	SP224EH3.7M1	98801105	98801700	98114103E	
EDPS 2000T	3	1,800	2,135	MODEL	DEH 100	T10028	DRSA 5K4	SP224EH3.7M1	SB137622D	SCP2	DHM 044	220V
				PART NO	98250000	98173000T	98600019	SP224EH3.7M1	98801105	98801700	98114103E	
EDPS 3500T	3		3,504	MODEL	DEH 100	T12034	DRSA 5K4	SP224EH3.7M1	SB137622D	SCP2	DHM 044	220V
				PART NO	98250000	98190000T	98600019	SP224EH3.7M1	98801105	98801700	98114103E	
EDPS 351T	3	400	348	MODEL	DEH 100	T5019	DRSA 5K2	SP382EH2.2M1	SB122638D	SCP2	DHM 044	380V
				PART NO	98250000	98161000T	98600010	SP382EH2.2M1	98801102	98801700	98114103E	
EDPS 651T	3	600	654	MODEL	DEH 100	T6024	DRSA 5K3	SP382EH2.2M1	SB122638D	SCP2	DHM 044	380V
				PART NO	98250000	98164000T	98600014	SP382EH2.2M1	98801102	98801700	98114103E	
EDPS 1200T	3	1,000	1,236	MODEL	DEH 100	T9020	DRSA 5K3	SP383EH3.7M1	SB137638D	SCP2	DHM 044	380V
				PART NO	98250000	98167000T	98600014	SP383EH3.7M1	98801106	98801700	98114103E	
EDPS 1600T	3	1,200	1,723	MODEL	DEH 100	T9028	DRSA 5K4	SP384EH3.7M1	SB137638D	SCP2	DHM 044	380V
				PART NO	98250000	98170000T	98600019	SP384EH3.7M1	98801106	98801700	98114103E	
EDPS 2000T	3	1,800	2,135	MODEL	DEH 100	T10028	DRSA 5K4	SP384EH3.7M1	SB137638D	SCP2	DHM 044	380V
				PART NO	98250000	98173000T	98600019	SP384EH3.7M1	98801106	98801700	98114103E	
EDPS 3500T	3		3,504	MODEL	DEH 100	T12034	DRSA 5K4	SP384EH3.7M1	SB137638D	SCP2	DHM 044	380V
				PART NO	98250000	98190000T	98600019	SP384EH3.7M1	98801106	98801700	98114103E	

POWER : 50Hz

Sol : 24V

SYSTEM MODEL	NUMBER OF TURNS LOCK TO LOCK (74º)	ENGINE HP	MAX. TORQUE (kgf·m)	DIVISION	COMPONENTS							POWER UNIT STANDARD (VOLTAGE)
					ELECTRONIC HANDLE UNIT	CYLINDER GROUP	RUDDER ANGLE SENSOR	POWER UNIT	ALARM BOX	STEERING SYSTEM CONTROL PANEL	EMERGENCY HANDLE	
EDPS 351T	3	400	348	MODEL	DEH 100	T5019	DRSA 5K2	SP223EH3.7M1	SB337522D	SCP2	DHM 044	220V
				PART NO	98250000	98161000T	98600010	SP223EH3.7M1	98801305	98801700	98114103E	
EDPS 651T	3	600	654	MODEL	DEH 100	T6024	DRSA 5K3	SP223EH3.7M1	SB337522D	SCP2	DHM 044	220V
				PART NO	98250000	98164000T	98600014	SP223EH3.7M1	98801305	98801700	98114103E	
EDPS 1200T	3	100	1,236	MODEL	DEH 100	T9020	DRSA 5K3	SP223EH3.7M1	SB337522D	SCP2	DHM 044	220V
				PART NO	98250000	98167000T	98600014	SP223EH3.7M1	98801305	98801700	98114103E	
EDPS 1600T	3	1,200	1,723	MODEL	DEH 100	T9028	DRSA 5K4	SP224EH3.7M1	SB337522D	SCP2	DHM 044	220V
				PART NO	98250000	98170000T	98600019	SP224EH3.7M1	98801305	98801700	98114103E	
EDPS 2000T	3	1,800	2,135	MODEL	DEH 100	T10028	DRSA 5K4	SP224EH3.7M1	SB337522D	SCP2	DHM 044	220V
				PART NO	98250000	98173000T	98600019	SP224EH3.7M1	98801305	98801700	98114103E	
EDPS 3500T	3		3,503	MODEL	DEH 100	T10028	DRSA 5K4	SP225EH5.5M1	SB455522D	SCP2	DHM 044	220V
				PART NO	98250000	98173000T	98600019	SP225EH5.5M1	98801401	98801700	98114103E	
EDPS 351T	3	400	348	MODEL	DEH 100	T5019	DRSA 5K2	SP383EH3.7M1	SB337538D	SCP2	DHM 044	380V
				PART NO	98250000	98161000T	98600010	SP383EH3.7M1	98801306	98801700	98114103E	
EDPS 651T	3	600	654	MODEL	DEH 100	T6024	DRSA 5K3	SP383EH3.7M1	SB337538D	SCP2	DHM 044	380V
				PART NO	98250000	98164000T	98600014	SP383EH3.7M1	98801306	98801700	98114103E	
EDPS 1200T	3	100	1,236	MODEL	DEH 100	T9020	DRSA 5K3	SP383EH3.7M1	SB337538D	SCP2	DHM 044	380V
				PART NO	98250000	98167000T	98600014	SP383EH3.7M1	98801306	98801700	98114103E	
EDPS 1600T	3	1,200	1,723	MODEL	DEH 100	T9028	DRSA 5K4	SP384EH3.7M1	SB337538D	SCP2	DHM 044	380V
				PART NO	98250000	98170000T	98600019	SP384EH3.7M1	98801306	98801700	98114103E	
EDPS 2000T	3	1,800	2,135	MODEL	DEH 100	T10028	DRSA 5K4	SP384EH3.7M1	SB337538D	SCP2	DHM 044	380V
				PART NO	98250000	98173000T	98600019	SP384EH3.7M1	98801306	98801700	98114103E	
EDPS 3500T	3		3,503	MODEL	DEH 100	T12034	DRSA 5K4	SP385EH5.5M1	SB455538D	SCP2	DHM 044	380V
				PART NO	98250000	98190000T	98600019	SP385EH5.5M1	98801402	98801700	98114103E	

※ If you want to use motor voltage 400V or 440V, please refer to page 57, 58.
※ If you want to use solenoid valve voltage DC 12V, AC 110V, please contact our sales team.

ELECTRONIC STEERING SYSTEM (POWER UNIT)

11-1 ELECTRONIC HANDLE UNIT / TWO RUDDERS TWIN CYLINDER / POWER UNIT (SINGLE MOTOR)

DIAGRAM

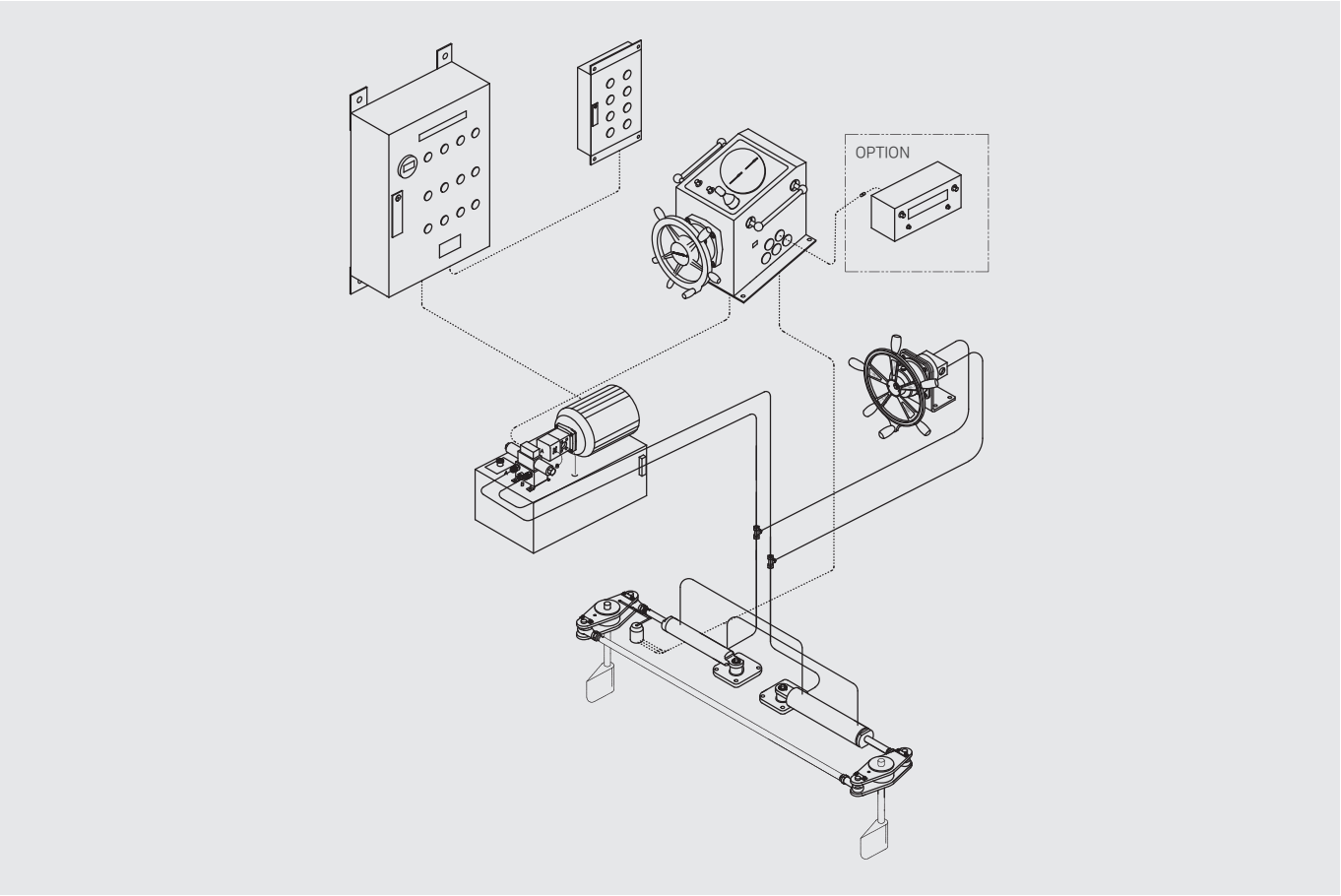

COMPONENTS

ELECTRONIC HANDLE UNIT

CYLINDER GROUP

ALARM BOX

POWER UNIT

RUDDER ANGLE SENSOR

EMERGENCY HANDLE

STEERING SYSTEM CONTROL PANEL

OPTION

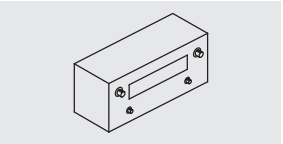

APS

※ Please purchase two emergency nipples by referring page 62.

ELECTRONIC STEERING SYSTEM (POWER UNIT)

11-1 ELECTRONIC HANDLE UNIT / TWO RUDDERS TWIN CYLINDER / POWER UNIT (SINGLE MOTOR)

POWER : 60Hz

Sol : 24V

SYSTEM MODEL	NUMBER OF TURNS LOCK TO LOCK (74º)	ENGINE HP	MAX. TORQUE (kgf·m)	DIVISION	COMPONENTS							POWER UNIT STANDARD (VOLTAGE)
					ELECTRONIC HANDLE UNIT	CYLINDER GROUP	RUDDER ANGLE SENSOR	POWER UNIT	ALARM BOX	STEERING SYSTEM CONTROL PANEL	EMERGENCY HANDLE	
EDPS 351TW	3	200 x 2	348	MODEL	DEH 100	TWW5019	DRSA 5K2	SP222EH2.2M1	SB122622D	SCP1	DHM 044	220V
				PART NO	98250000	98161000TW	98600010	SP222EH2.2M1	98801101	98801600	98114103E	
EDPS 651TW	3	300 x 2	654	MODEL	DEH 100	TW6024	DRSA 5K3	SP222EH2.2M1	SB122622D	SCP1	DHM 044	220V
				PART NO	98250000	98164000TW	98600014	SP222EH2.2M1	98801101	98801600	98114103E	
EDPS 1200TW	3	500 x 2	1,236	MODEL	DEH 100	TW9020	DRSA 5K3	SP223EH3.7M1	SB137622D	SCP1	DHM 044	220V
				PART NO	98250000	98167000TW	98600014	SP223EH3.7M1	98801105	98801600	98114103E	
EDPS 1600TW	3	600 x 2	1,723	MODEL	DEH 100	TW9028	DRSA 5K4	SP224EH3.7M1	SB137622D	SCP1	DHM 044	220V
				PART NO	98250000	98170000TW	98600019	SP224EH3.7M1	98801105	98801600	98114103E	
EDPS 2000TW	3	900 x 2	2,135	MODEL	DEH 100	TW10028	DRSA 5K4	SP224EH3.7M1	SB137622D	SCP1	DHM 044	220V
				PART NO	98250000	98173000TW	98600019	SP224EH3.7M1	98801105	98801600	98114103E	
EDPS 3500TW	3		3.503	MODEL	DEH 100	TW12034	DRSA 5K4	SP224EH3.7M1	SB137622D	SCP1	DHM 044	220V
				PART NO	98250000	98190000TW	98600019	SP224EH3.7M1	98801105	98801600	98114103E	
EDPS 351TW	3	200 x 2	348	MODEL	DEH 100	TWW5019	DRSA 5K2	SP382EH2.2M1	SB122638D	SCP1	DHM 044	380V
				PART NO	98250000	98161000TW	98600010	SP382EH2.2M1	98801102	98801600	98114103E	
EDPS 651TW	3	300 x 2	654	MODEL	DEH 100	TW6024	DRSA 5K3	SP382EH2.2M1	SB122638D	SCP1	DHM 044	380V
				PART NO	98250000	98164000TW	98600014	SP382EH2.2M1	98801102	98801600	98114103E	
EDPS 1200TW	3	500 x 2	1,236	MODEL	DEH 100	TW9020	DRSA 5K3	SP383EH3.7M1	SB137638D	SCP1	DHM 044	380V
				PART NO	98250000	98167000TW	98600014	SP383EH3.7M1	98801106	98801600	98114103E	
EDPS 1600TW	3	600 x 2	1,723	MODEL	DEH 100	TW9028	DRSA 5K4	SP384EH3.7M1	SB137638D	SCP1	DHM 044	380V
				PART NO	98250000	98170000TW	98600019	SP384EH3.7M1	98801106	98801600	98114103E	
EDPS 2000TW	3	900 x 2	2,135	MODEL	DEH 100	TW10028	DRSA 5K4	SP384EH3.7M1	SB137638D	SCP1	DHM 044	380V
				PART NO	98250000	98173000TW	98600019	SP384EH3.7M1	98801106	98801600	98114103E	
EDPS 3500TW	3		3,503	MODEL	DEH 100	TW12034	DRSA 5K4	SP384EH3.7M1	SB137638D	SCP1	DHM 044	380V
				PART NO	98250000	98190000TW	98600019	SP384EH3.7M1	98801106	98801600	98114103E	

POWER : 50Hz

Sol : 24V

SYSTEM MODEL	NUMBER OF TURNS LOCK TO LOCK (74º)	ENGINE HP	MAX. TORQUE (kgf·m)	DIVISION	COMPONENTS							POWER UNIT STANDARD (VOLTAGE)
					ELECTRONIC HANDLE UNIT	CYLINDER GROUP	RUDDER ANGLE SENSOR	POWER UNIT	ALARM BOX	STEERING SYSTEM CONTROL PANEL	EMERGENCY HANDLE	
EDPS 351TW	3	200 x 2	348	MODEL	DEH 100	TW5019	DRSA 5K2	SP223EH3.7M1	SB337522D	SCP1	DHM 044	220V
				PART NO	98250000	98161000TW	98600010	SP223EH3.7M1	98801305	98801600	98114103E	
EDPS 651TW	3	300 x 2	654	MODEL	DEH 100	TW6024	DRSA 5K3	SP223EH3.7M1	SB337522D	SCP1	DHM 044	220V
				PART NO	98250000	98164000TW	98600014	SP223EH3.7M1	98801305	98801600	98114103E	
EDPS 1200TW	3	500 x 2	1,236	MODEL	DEH 100	TW9020	DRSA 5K3	SP223EH3.7M1	SB337522D	SCP1	DHM 044	220V
				PART NO	98250000	98167000TW	98600014	SP223EH3.7M1	98801305	98801600	98114103E	
EDPS 1600TW	3	600 x 2	1,723	MODEL	DEH 100	TW9028	DRSA 5K4	SP224EH3.7M1	SB337522D	SCP1	DHM 044	220V
				PART NO	98250000	98170000TW	98600019	SP224EH3.7M1	98801305	98801600	98114103E	
EDPS 2000TW	3	900 x 2	2,135	MODEL	DEH 100	TW10028	DRSA 5K4	SP224EH3.7M1	SB337522D	SCP1	DHM 044	220V
				PART NO	98250000	98173000TW	98600019	SP224EH3.7M1	98801305	98801600	98114103E	
EDPS 3500TW	3		3,503	MODEL	DEH 100	TW12034	DRSA 5K4	SP225EH.5.5M1	SB455522D	SCP1	DHM 044	220V
				PART NO	98250000	98190000TW	98600019	SP225EH.5.5M1	98801401	98801600	98114103E	
EDPS 351TW	3	200 x 2	348	MODEL	DEH 100	TW5019	DRSA 5K2	SP383EH3.7M1	SB337538D	SCP1	DHM 044	380V
				PART NO	98250000	98161000TW	98600010	SP383EH3.7M1	98801306	98801600	98114103E	
EDPS 651TW	3	300 x 2	654	MODEL	DEH 100	TW6024	DRSA 5K3	SP383EH3.7M1	SB337538D	SCP1	DHM 044	380V
				PART NO	98250000	98164000TW	98600014	SP383EH3.7M1	98801306	98801600	98114103E	
EDPS 1200TW	3	500 x 2	1,236	MODEL	DEH 100	TW9020	DRSA 5K3	SP383EH3.7M1	SB337538D	SCP1	DHM 044	380V
				PART NO	98250000	98167000TW	98600014	SP383EH3.7M1	98801306	98801600	98114103E	
EDPS 1600TW	3	600 x 2	1,723	MODEL	DEH 100	TW9028	DRSA 5K4	SP384EH3.7M1	SB337538D	SCP1	DHM 044	380V
				PART NO	98250000	98170000TW	98600019	SP384EH3.7M1	98801306	98801600	98114103E	
EDPS 2000TW	3	900 x 2	2,135	MODEL	DEH 100	TW10028	DRSA 5K4	SP384EH3.7M1	SB337538D	SCP1	DHM 044	380V
				PART NO	98250000	98173000TW	98600019	SP384EH3.7M1	98801306	98801600	98114103E	
EDPS 3500TW	3		3.503	MODEL	DEH 100	TW12034	DRSA 5K4	SP385EH5.5M1	SB455538D	SCP1	DHM 044	380V
				PART NO	98250000	98190000TW	98600019	SP385EH5.5M1	98801402	98801600	98114103E	

※ If you want to use motor voltage 400V or 440V, please refer to page 57, 58.
※ If you want to use solenoid valve voltage DC 12V, AC 110V, please contact our sales team.

ELECTRONIC STEERING SYSTEM (POWER UNIT)

11-2 ELECTRONIC HANDLE UNIT / TWO RUDDERS TWIN CYLINDERS / POWER UNIT (EMERGENCY)

DIAGRAM

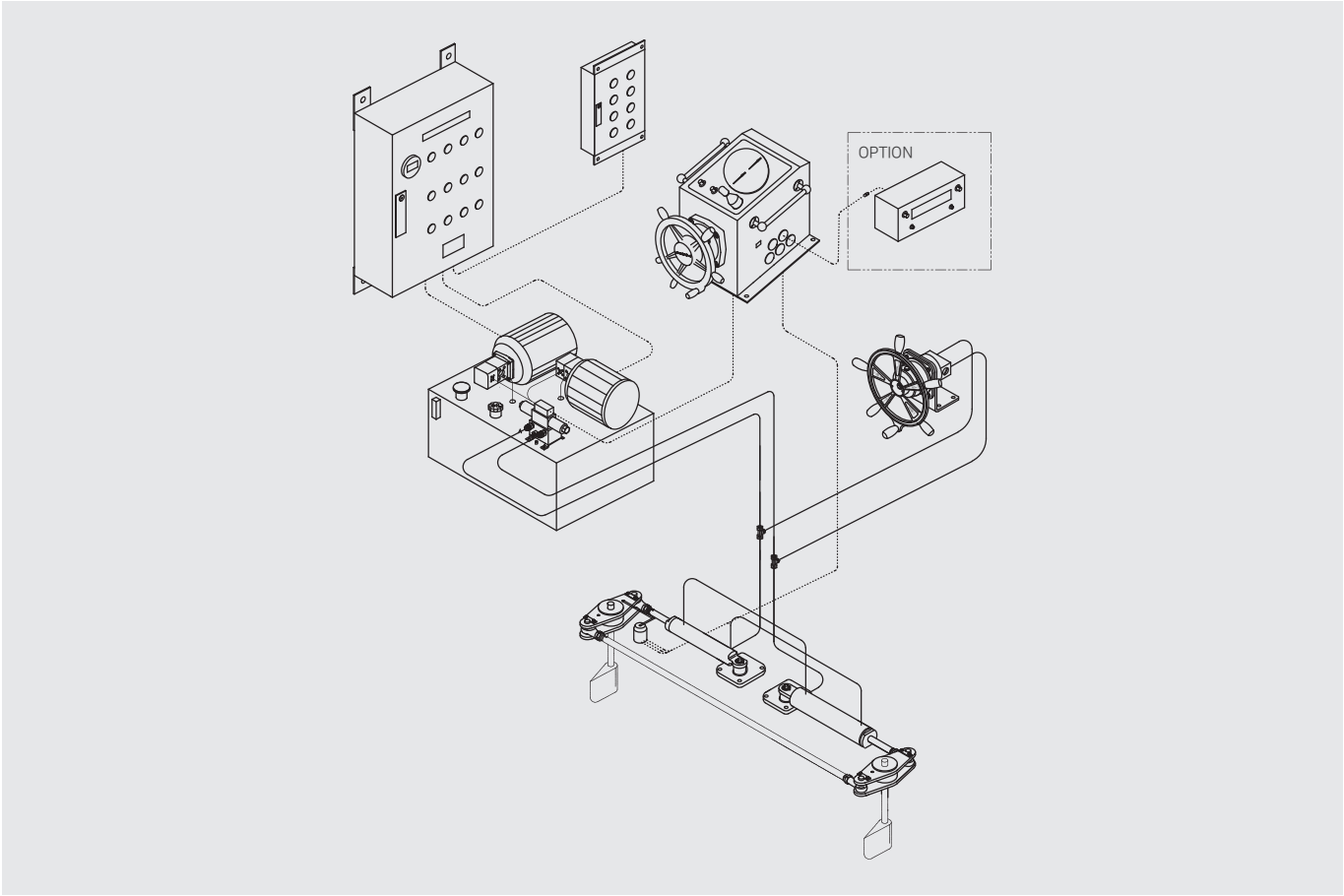

COMPONENTS

ELECTRONIC HANDLE UNIT

CYLINDER GROUP

ALARM BOX

POWER UNIT

RUDDER ANGLE SENSOR

EMERGENCY HANDLE

STEERING SYSTEM CONTROL PANEL

OPTION

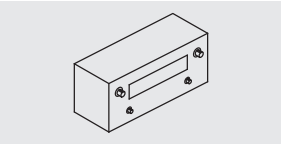

APS

※ Please purchase two emergency nipples by referring page 62.

ELECTRONIC STEERING SYSTEM (POWER UNIT)

11-2 ELECTRONIC HANDLE UNIT / TWO RUDDERS TWIN CYLINDERS / POWER UNIT (EMERGENCY)

POWER : 60Hz

Sol : 24V

SYSTEM MODEL	NUMBER OF TURNS LOCK TO LOCK (74º)	ENGINE HP	MAX. TORQUE (kgf·m)	DIVISION	COMPONENTS							POWER UNIT STANDARD (VOLTAGE)
					ELECTRONIC HANDLE UNIT	CYLINDER GROUP	RUDDER ANGLE SENSOR	POWER UNIT	ALARM BOX	STEERING SYSTEM CONTROL PANEL	EMERGENCY HANDLE	
EDPS 351TW	3	200 x 2	348	MODEL	DEH 100	TWW5019	DRSA 5K2	SP222EH2.2M2	SB122622D	SCP1	DHM 044	220V
				PART NO	98250000	98161000TW	98600010	SP222EH2.2M2	98801101	98801600	98114103E	
EDPS 651TW	3	300 x 2	654	MODEL	DEH 100	TW6024	DRSA 5K3	SP222EH2.2M2	SB122622D	SCP1	DHM 044	220V
				PART NO	98250000	98164000TW	98600014	SP222EH2.2M2	98801101	98801600	98114103E	
EDPS 1200TW	3	500 x 2	1,236	MODEL	DEH 100	TW9020	DRSA 5K3	SP223EH3.7M2	SB137622D	SCP1	DHM 044	220V
				PART NO	98250000	98167000TW	98600014	SP223EH3.7M2	98801105	98801600	98114103E	
EDPS 1600TW	3	600 x 2	1,723	MODEL	DEH 100	TW9028	DRSA 5K4	SP224EH3.7M2	SB137622D	SCP1	DHM 044	220V
				PART NO	98250000	98170000TW	98600019	SP224EH3.7M2	98801105	98801600	98114103E	
EDPS 2000TW	3	900 x 2	2,135	MODEL	DEH 100	TW10028	DRSA 5K4	SP224EH3.7M2	SB137622D	SCP1	DHM 044	220V
				PART NO	98250000	98173000TW	98600019	SP224EH3.7M2	98801105	98801600	98114103E	
EDPS 3500TW	3		3,503	MODEL	DEH 100	TW12034	DRSA 5K4	SP224EH3.7M2	SB137622D	SCP1	DHM 044	220V
				PART NO	98250000	98190000TW	98600019	SP224EH3.7M2	98801105	98801600	98114103E	
EDPS 351TW	3	200 x 2	348	MODEL	DEH 100	TWW5019	DRSA 5K2	SP382EH2.2M2	SB122638D	SCP1	DHM 044	380V
				PART NO	98250000	98161000TW	98600010	SP382EH2.2M2	98801102	98801600	98114103E	
EDPS 651TW	3	300 x 2	654	MODEL	DEH 100	TW6024	DRSA 5K3	SP382EH2.2M2	SB122638D	SCP1	DHM 044	380V
				PART NO	98250000	98164000TW	98600014	SP382EH2.2M2	98801102	98801600	98114103E	
EDPS 1200TW	3	500 x 2	1,236	MODEL	DEH 100	TW9020	DRSA 5K3	SP383EH3.7M2	SB137638D	SCP1	DHM 044	380V
				PART NO	98250000	98167000TW	98600014	SP383EH3.7M2	98801106	98801600	98114103E	
EDPS 1600TW	3	600 x 2	1,723	MODEL	DEH 100	TW9028	DRSA 5K4	SP384EH3.7M2	SB137638D	SCP1	DHM 044	380V
				PART NO	98250000	98170000TW	98600019	SP384EH3.7M2	98801106	98801600	98114103E	
EDPS 2000TW	3	900 x 2	2,135	MODEL	DEH 100	TW10028	DRSA 5K4	SP384EH3.7M2	SB137638D	SCP1	DHM 044	380V
				PART NO	98250000	98173000TW	98600019	SP384EH3.7M2	98801106	98801600	98114103E	
EDPS 3500TW	3		3,503	MODEL	DEH 100	TW12034	DRSA 5K4	SP384EH3.7M2	SB137638D	SCP1	DHM 044	380V
				PART NO	98250000	98190000TW	98600019	SP384EH3.7M2	98801106	98801600	98114103E	

POWER : 50Hz

Sol : 24V

SYSTEM MODEL	NUMBER OF TURNS LOCK TO LOCK (74º)	ENGINE HP	MAX. TORQUE (kgf·m)	DIVISION	COMPONENTS							POWER UNIT STANDARD (VOLTAGE)
					ELECTRONIC HANDLE UNIT	CYLINDER GROUP	RUDDER ANGLE SENSOR	POWER UNIT	ALARM BOX	STEERING SYSTEM CONTROL PANEL	EMERGENCY HANDLE	
EDPS 351TW	3	200 x 2	348	MODEL	DEH 100	TW5019	DRSA 5K2	SP223EH3.7M2	SB337522D	SCP1	DHM 044	220V
				PART NO	98250000	98161000TW	98600010	SP223EH3.7M2	98801305	98801600	98114103E	
EDPS 651TW	3	300 x 2	654	MODEL	DEH 100	TW6024	DRSA 5K3	SP223EH3.7M2	SB337522D	SCP1	DHM 044	220V
				PART NO	98250000	98164000TW	98600014	SP223EH3.7M2	98801305	98801600	98114103E	
EDPS 1200TW	3	500 x 2	1,236	MODEL	DEH 100	TW9020	DRSA 5K3	SP223EH3.7M2	SB337522D	SCP1	DHM 044	220V
				PART NO	98250000	98167000TW	98600014	SP223EH3.7M2	98801305	98801600	98114103E	
EDPS 1600TW	3	600 x 2	1,723	MODEL	DEH 100	TW9028	DRSA 5K4	SP224EH3.7M2	SB337522D	SCP1	DHM 044	220V
				PART NO	98250000	98170000TW	98600019	SP224EH3.7M2	98801305	98801600	98114103E	
EDPS 2000TW	3	900 x 2	2,135	MODEL	DEH 100	TW10028	DRSA 5K4	SP224EH3.7M2	SB337522D	SCP1	DHM 044	220V
				PART NO	98250000	98173000TW	98600019	SP224EH3.7M2	98801305	98801600	98114103E	
EDPS 3500TW	3		3,503	MODEL	DEH 100	TW12034	DRSA 5K4	SP225EH.5.5M2	SB455522D	SCP1	DHM 044	220V
				PART NO	98250000	98190000TW	98600019	SP225EH.5.5M2	98801401	98801600	98114103E	
EDPS 351TW	3	200 x 2	348	MODEL	DEH 100	TW5019	DRSA 5K2	SP383EH3.7M2	SB337538D	SCP1	DHM 044	380V
				PART NO	98250000	98161000TW	98600010	SP383EH3.7M2	98801306	98801600	98114103E	
EDPS 651TW	3	300 x 2	654	MODEL	DEH 100	TW6024	DRSA 5K3	SP383EH3.7M2	SB337538D	SCP1	DHM 044	380V
				PART NO	98250000	98164000TW	98600014	SP383EH3.7M2	98801306	98801600	98114103E	
EDPS 1200TW	3	500 x 2	1,236	MODEL	DEH 100	TW9020	DRSA 5K3	SP383EH3.7M2	SB337538D	SCP1	DHM 044	380V
				PART NO	98250000	98167000TW	98600014	SP383EH3.7M2	98801306	98801600	98114103E	
EDPS 1600TW	3	600 x 2	1,723	MODEL	DEH 100	TW9028	DRSA 5K4	SP384EH3.7M2	SB337538D	SCP1	DHM 044	380V
				PART NO	98250000	98170000TW	98600019	SP384EH3.7M2	98801306	98801600	98114103E	
EDPS 2000TW	3	900 x 2	2,135	MODEL	DEH 100	TW10028	DRSA 5K4	SP384EH3.7M2	SB337538D	SCP1	DHM 044	380V
				PART NO	98250000	98173000TW	98600019	SP384EH3.7M2	98801306	98801600	98114103E	
EDPS 3500TW	3		3,503	MODEL	DEH 100	TW12034	DRSA 5K4	SP385EH5.5M2	SB455538D	SCP1	DHM 044	380V
				PART NO	98250000	98190000TW	98600019	SP385EH5.5M2	98801402	98801600	98114103E	

※ If you want to use motor voltage 400V or 440V, please refer to page 57, 58.
※ If you want to use solenoid valve voltage DC 12V, AC 110V, please contact our sales team.

ELECTRONIC STEERING SYSTEM (POWER UNIT)

11-3 ELECTRONIC HANDLE UNIT / TWO RUDDERS TWIN CYLINDERS / DOUBLE POWER UNIT

DIAGRAM

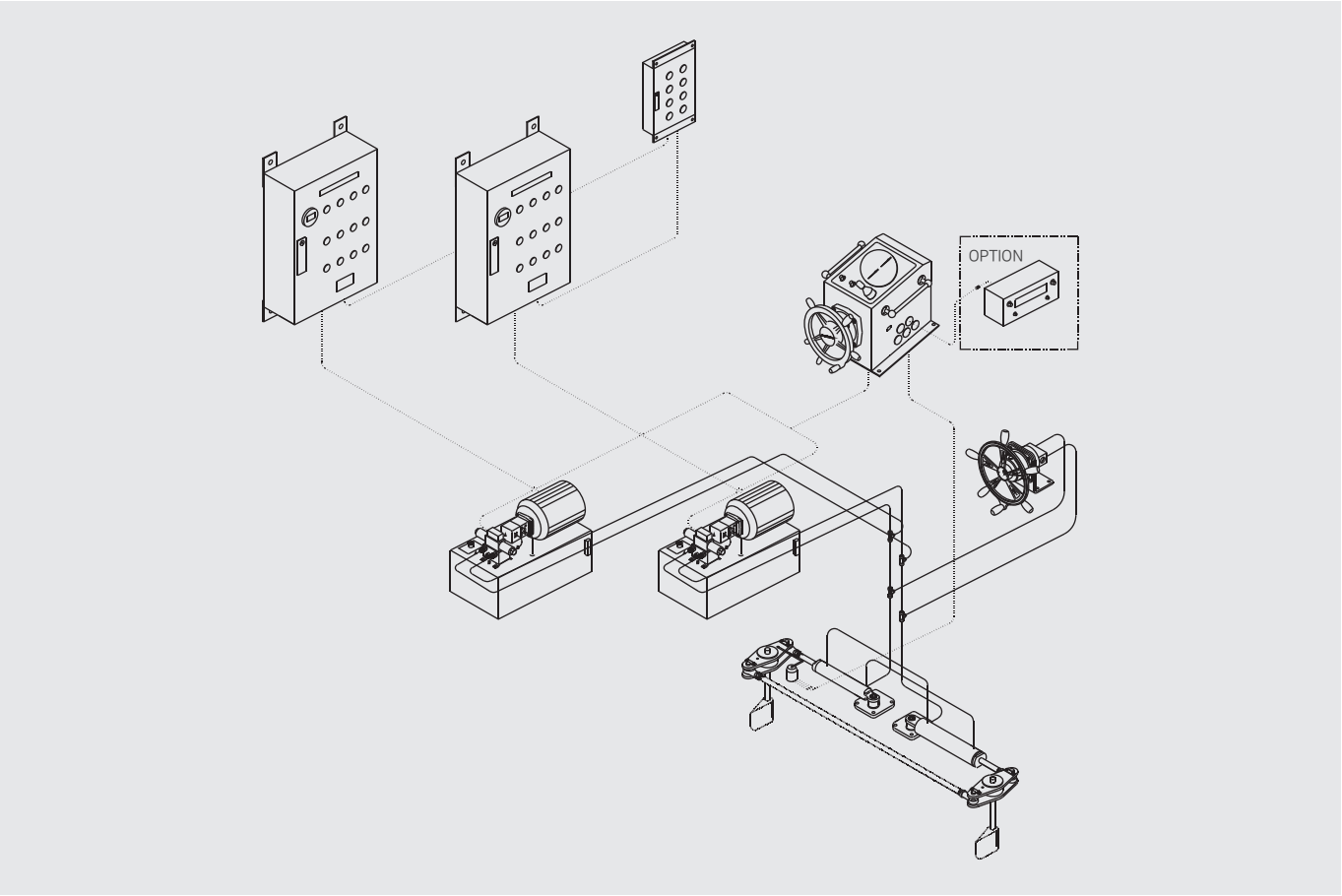

COMPONENTS

ELECTRONIC HANDLE UNIT

CYLINDER GROUP

ALARM BOX

POWER UNIT

RUDDER ANGLE SENSOR

EMERGENCY HANDLE

STEERING SYSTEM CONTROL PANEL

OPTION

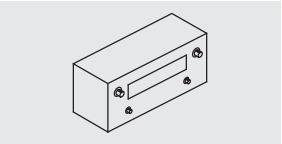

APS

※ Please purchase two emergency nipples by referring page 62.
※ For this system, please purchase 2 power units and 2 alarm boxes.

ELECTRONIC STEERING SYSTEM (POWER UNIT)

11-3 ELECTRONIC HANDLE UNIT / TWO RUDDERS TWIN CYLINDERS / DOUBLE POWER UNIT

POWER : 60Hz

Sol : 24V

SYSTEM MODEL	NUMBER OF TURNS LOCK TO LOCK (74º)	ENGINE HP	MAX. TORQUE (kgf·m)	DIVISION	COMPONENTS							POWER UNIT STANDARD (VOLTAGE)
					ELECTRONIC HANDLE UNIT	CYLINDER GROUP	RUDDER ANGLE SENSOR	POWER UNIT	ALARM BOX	STEERING SYSTEM CONTROL PANEL	EMERGENCY HANDLE	
EDPS 351TW	3	200 x 2	348	MODEL	DEH 100	TWW5019	DRSA 5K2	SP222EH2.2M1	SB122622D	SCP2	DHM 044	220V
				PART NO	98250000	98161000TW	98600010	SP222EH2.2M1	98801101	98801700	98114103E	
EDPS 651TW	3	300 x 2	654	MODEL	DEH 100	TW6024	DRSA 5K3	SP222EH2.2M1	SB122622D	SCP2	DHM 044	220V
				PART NO	98250000	98164000TW	98600014	SP222EH2.2M1	98801101	98801700	98114103E	
EDPS 1200TW	3	500 x 2	1,236	MODEL	DEH 100	TW9020	DRSA 5K3	SP223EH3.7M1	SB137622D	SCP2	DHM 044	220V
				PART NO	98250000	98167000TW	98600014	SP223EH3.7M1	98801105	98801700	98114103E	
EDPS 1600TW	3	600 x 2	1,723	MODEL	DEH 100	TW9028	DRSA 5K4	SP224EH3.7M1	SB137622D	SCP2	DHM 044	220V
				PART NO	98250000	98170000TW	98600019	SP224EH3.7M1	98801105	98801700	98114103E	
EDPS 2000TW	3	900 x 2	2,135	MODEL	DEH 100	TW10028	DRSA 5K4	SP224EH3.7M1	SB137622D	SCP2	DHM 044	220V
				PART NO	98250000	98173000TW	98600019	SP224EH3.7M1	98801105	98801700	98114103E	
EDPS 3500TW	3		3,504	MODEL	DEH 100	TW12034	DRSA 5K4	SP224EH3.7M1	SB137622D	SCP2	DHM 044	220V
				PART NO	98250000	98190000TW	98600019	SP224EH3.7M1	98801105	98801700	98114103E	
EDPS 351TW	3	200 x 2	348	MODEL	DEH 100	TWW5019	DRSA 5K2	SP382EH2.2M1	SB122638D	SCP2	DHM 044	380V
				PART NO	98250000	98161000TW	98600010	SP382EH2.2M1	98801102	98801700	98114103E	
EDPS 651TW	3	300 x 2	654	MODEL	DEH 100	TW6024	DRSA 5K3	SP382EH2.2M1	SB122638D	SCP2	DHM 044	380V
				PART NO	98250000	98164000TW	98600014	SP382EH2.2M1	98801102	98801700	98114103E	
EDPS 1200TW	3	500 x 2	1,236	MODEL	DEH 100	TW9020	DRSA 5K3	SP383EH3.7M1	SB137638D	SCP2	DHM 044	380V
				PART NO	98250000	98167000TW	98600014	SP383EH3.7M1	98801106	98801700	98114103E	
EDPS 1600TW	3	600 x 2	1,723	MODEL	DEH 100	TW9028	DRSA 5K4	SP384EH3.7M1	SB137638D	SCP2	DHM 044	380V
				PART NO	98250000	98170000TW	98600019	SP384EH3.7M1	98801106	98801700	98114103E	
EDPS 2000TW	3	900 x 2	2,135	MODEL	DEH 100	TW10028	DRSA 5K4	SP384EH3.7M1	SB137638D	SCP2	DHM 044	380V
				PART NO	98250000	98173000TW	98600019	SP384EH3.7M1	98801106	98801700	98114103E	
EDPS 3500TW	3		3,504	MODEL	DEH 100	TW12034	DRSA 5K4	SP384EH3.7M1	SB137638D	SCP2	DHM 044	380V
				PART NO	98250000	98190000TW	98600019	SP384EH3.7M1	98801106	98801700	98114103E	

POWER : 50Hz

Sol : 24V

SYSTEM MODEL	NUMBER OF TURNS LOCK TO LOCK (74º)	ENGINE HP	MAX. TORQUE (kgf·m)	DIVISION	COMPONENTS							POWER UNIT STANDARD (VOLTAGE)
					ELECTRONIC HANDLE UNIT	CYLINDER GROUP	RUDDER ANGLE SENSOR	POWER UNIT	ALARM BOX	STEERING SYSTEM CONTROL PANEL	EMERGENCY HANDLE	
EDPS 351TW	3	200 x 2	348	MODEL	DEH 100	TW5019	DRSA 5K2	SP223EH3.7M1	SB337522D	SCP2	DHM 044	220V
				PART NO	98250000	98161000TW	98600010	SP223EH3.7M1	98801305	98801700	98114103E	
EDPS 651TW	3	300 x 2	654	MODEL	DEH 100	TW6024	DRSA 5K3	SP223EH3.7M1	SB337522D	SCP2	DHM 044	220V
				PART NO	98250000	98164000TW	98600014	SP223EH3.7M1	98801305	98801700	98114103E	
EDPS 1200TW	3	500 x 2	1,236	MODEL	DEH 100	TW9020	DRSA 5K3	SP223EH3.7M1	SB337522D	SCP2	DHM 044	220V
				PART NO	98250000	98167000TW	98600014	SP223EH3.7M1	98801305	98801700	98114103E	
EDPS 1600TW	3	600 x 2	1,723	MODEL	DEH 100	TW9028	DRSA 5K4	SP224EH3.7M1	SB337522D	SCP2	DHM 044	220V
				PART NO	98250000	98170000TW	98600019	SP224EH3.7M1	98801305	98801700	98114103E	
EDPS 2000TW	3	900 x 2	2,135	MODEL	DEH 100	TW10028	DRSA 5K4	SP224EH3.7M1	SB337522D	SCP2	DHM 044	220V
				PART NO	98250000	98173000TW	98600019	SP224EH3.7M1	98801305	98801700	98114103E	
EDPS 3500TW	3		3.503	MODEL	DEH 100	TW12034	DRSA 5K4	SP225EH5.5M1	SB455522D	SCP2	DHM 044	220V
				PART NO	98250000	98190000TW	98600019	SP225EH5.5M1	98801401	98801700	98114103E	
EDPS 351TW	3	200 x 2	348	MODEL	DEH 100	TW5019	DRSA 5K2	SP383EH3.7M1	SB337538D	SCP2	DHM 044	380V
				PART NO	98250000	98161000TW	98600010	SP383EH3.7M1	98801306	98801700	98114103E	
EDPS 651TW	3	300 x 2	654	MODEL	DEH 100	TW6024	DRSA 5K3	SP383EH3.7M1	SB337538D	SCP2	DHM 044	380V
				PART NO	98250000	98164000TW	98600014	SP383EH3.7M1	98801306	98801700	98114103E	
EDPS 1200TW	3	500 x 2	1,236	MODEL	DEH 100	TW9020	DRSA 5K3	SP383EH3.7M1	SB337538D	SCP2	DHM 044	380V
				PART NO	98250000	98167000TW	98600014	SP383EH3.7M1	98801306	98801700	98114103E	
EDPS 1600TW	3	600 x 2	1,723	MODEL	DEH 100	TW9028	DRSA 5K4	SP384EH3.7M1	SB337538D	SCP2	DHM 044	380V
				PART NO	98250000	98170000TW	98600019	SP384EH3.7M1	98801306	98801700	98114103E	
EDPS 2000TW	3	900 x 2	2,135	MODEL	DEH 100	TW10028	DRSA 5K4	SP384EH3.7M1	SB337538D	SCP2	DHM 044	380V
				PART NO	98250000	98173000TW	98600019	SP384EH3.7M1	98801306	98801700	98114103E	
EDPS 3500TW	3		3,503	MODEL	DEH 100	TW12034	DRSA 5K4	SP385EH5.5M1	SB455538D	SCP2	DHM 044	380V
				PART NO	98250000	98190000TW	98600019	SP385EH5.5M1	9880140	98801700	98114103E	

※ If you want to use motor voltage 400V or 440V, please refer to page 57, 58.
※ If you want to use solenoid valve voltage DC 12V, AC 110V, please contact our sales team.

12 TWO ELECTRONIC HANDLE STEERING SYSTEM DIAGRAM

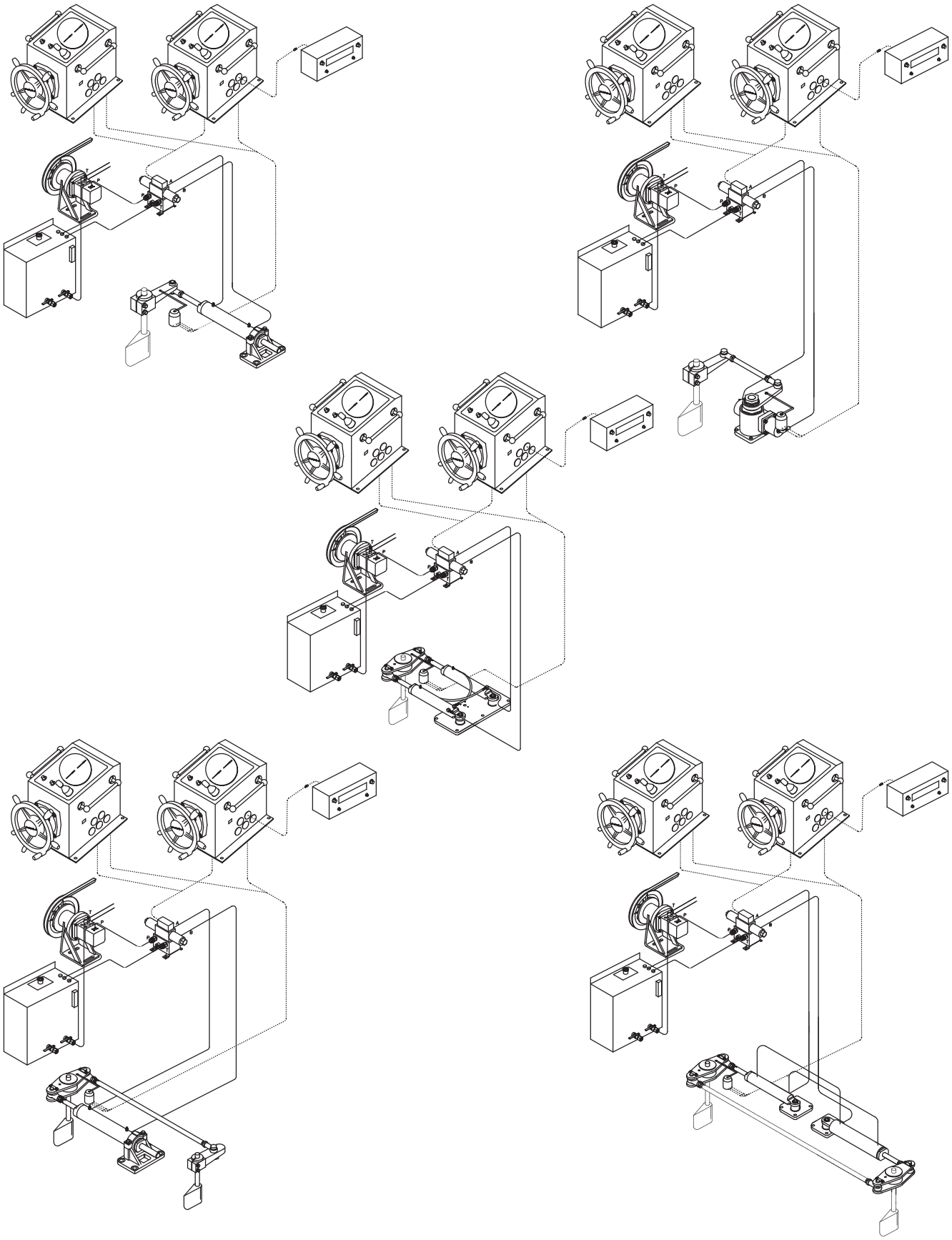

※ Please purchase four emergency nipples by referring page 62.

13 TWO ELECTRONIC HANDLE STEERING SYSTEM DIAGRAM (POWER UNIT)

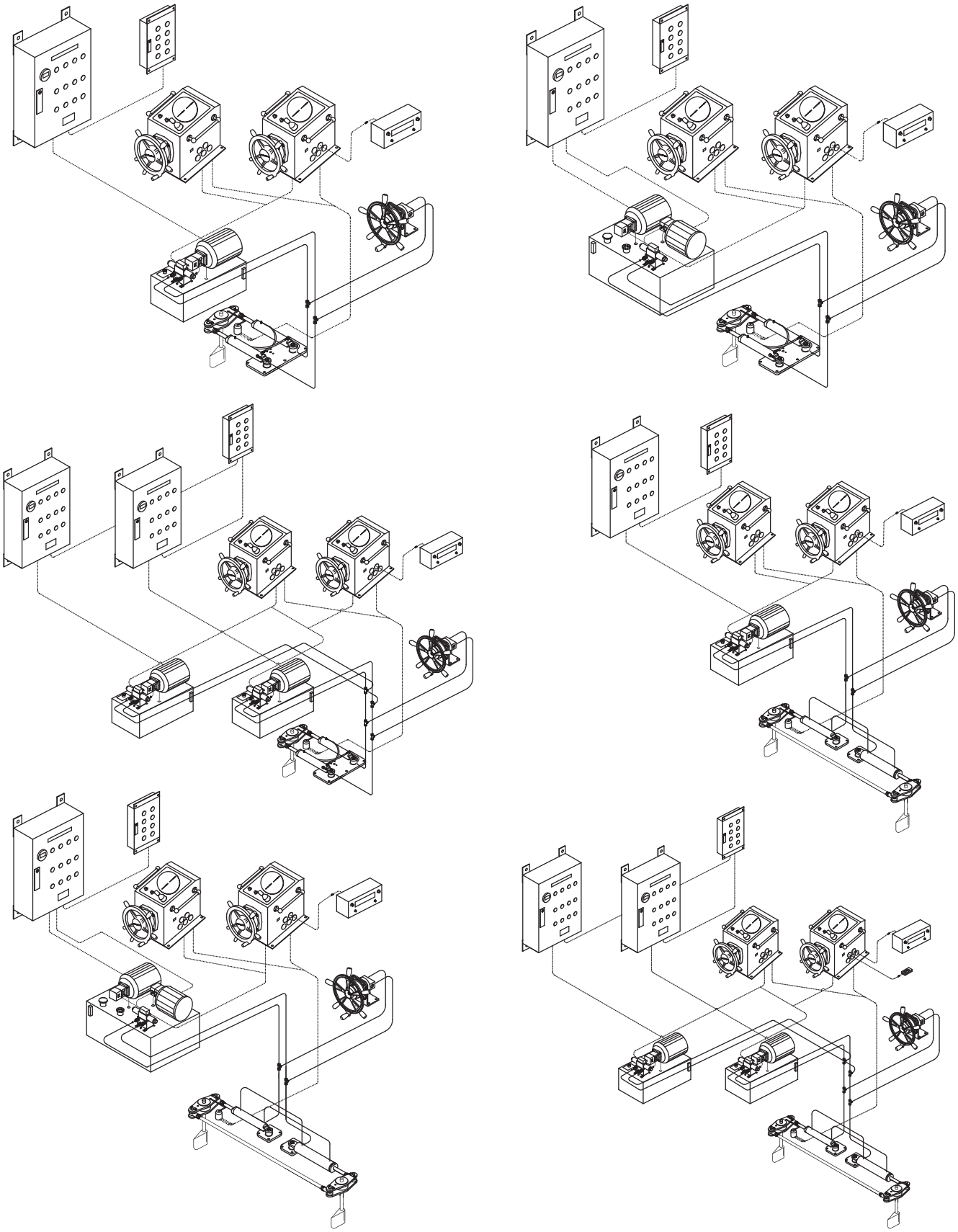

※ Please purchase four emergency nipples by referring page 62.

ONE RUDDER SINGLE CYLINDER

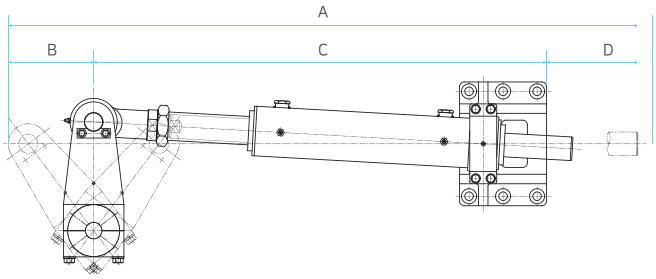

PART NO	MODEL	CYLINDER TORQUE				FLOW RATE (cc/rev)	CYLINDER DIAMETER (Φ)	WEIGHT (kg)	STROKE (mm)	INSTALLATION DIMENSION (L*W*H.mm)	DIMENSION(mm)				REMARK
		MANUAL(60kg/cm²)		POWER(85kg/cm²)											
		kgf·m	N·m	kgf·m	N·m						A	B	C	D	
98111000S	S5015	90	886	128	1,254	222	50	21	151	844*288*150	843	118	626	98	
98114000S	S5019	112	1,099	158	1,557	275	50	21	187	914*288*150	933	118	680	134	
98123000S	S6024	208	2,042	295	2,893	510	60	38	241	1,150*351*167	1134	155	801	176	
98126000S	S9020	356	3,495	505	4,951	874	90	71	199	1,099*358*217	1099	142	842	115	
98129000S	S9028	497	4,872	704	6,903	1,218	90	35	277	1,332*410*217	1333	181	958	193	

TWO RUDDERS SINGLE CYLINDER

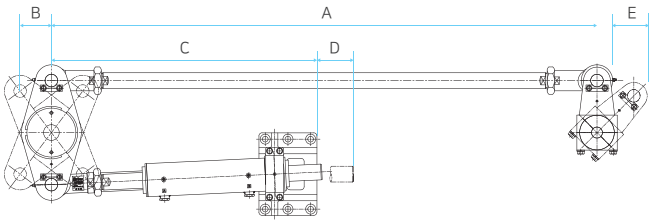

PART NO	MODEL	CYLINDER TORQUE				FLOW RATE (cc/rev)	CYLINDER DIAMETER (Φ)	WEIGHT (kg)	STROKE (mm)	INSTALLATION DIMENSION (L*W*H.mm)	DIMENSION(mm)					REMARK
		MANUAL(60kg/cm²)		POWER(85kg/cm²)												
		kgf·m	N·m	kgf·m	N·m						A	B	C	D	E	
98111000SW	SW5015	90	886	128	1,254	222	Ø50	21	151	844*288*150	-	118	626	98	118	
98114000SW	SW5019	112	1,099	158	1,557	275	Ø50	21	187	914*288*150	-	118	680	134	118	
98123000SW	SW6024	208	2,042	295	2,893	510	Ø60	38	241	1,150*351*167	-	155	801	176	155	
98126000SW	SW9020	356	3,495	505	4,951	874	Ø90	71	199	1,099*358*217	-	149	176	115	142	
98129001SW	SW9028	497	4,872	704	6,903	1,218	Ø90	35	277	1,332*410*217	-	188	155	193	181	

※ Dimension A might be different depending on shaft distance of rudder.

ROTARY CYLINDER

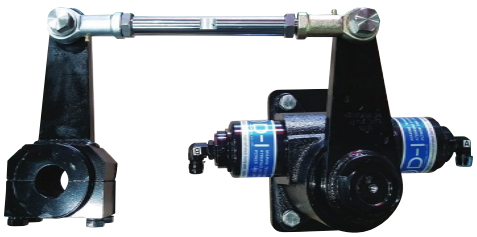

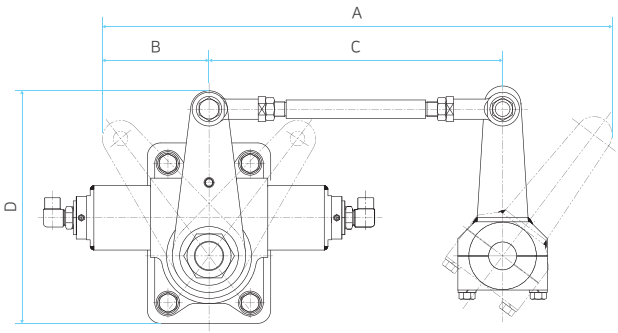

PART NO	MODEL	CYLINDER TORQUE (kg/cm²)		FLOW RATE (cc/rev)	CYLINDER DIAMETER	WEIGHT (KG)	INSTALLATION DIMENSION (L*W*H.mm)	INSTALLATION DIMENSION (L*W*H.mm)				REMARK
		kgf·m	N·m					A	B	C	D	
98117000R	R100	119	1,166	240	Ø50	34	675*328*265	695	145	400	317	MANUAL
98117000P	R160	169	1,656	240	Ø50	34	675*328*265	695	145	400	317	POWER

ONE RUDDER TWIN CYLINDER

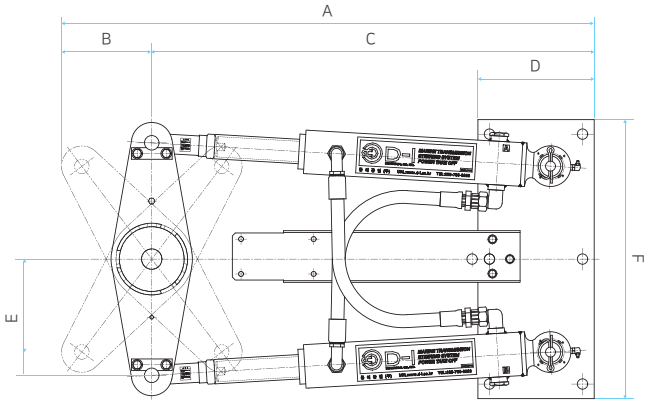

PART NO	MODEL	CYLINDER TORQUE				FLOW RATE (cc/rev)	CYLINDER DIAMETER (Φ)	WEIGHT (kg)	STROKE (mm)	INSTALLATION DIMENSION (L*W*H.mm)	DIMENSION(mm)						REMARK
		MANUAL(60kg/cm²)		POWER(85kg/cm²)													
		kgf·m	N·m	kgf·m	N·m						A	B	C	D	C	D	
98163000T	BT5019	245	2,403	347	3,405	601	50	32	187	810*440*128							
98166000T	BT6024	461	4,520	653	6,404	1,130	60	58	241	924*484*151							
98167000T	T9020	872	8,551	1,236	12,114	2,137	90	105	199	968*474*195	914	99	815	200	165	470	
98170000T	T9028	1,216	11,919	1,723	16,886	2,978	90	148	277	1125*584*180	963	124	839	216	207	522	
98173000T	T10028	1,507	14,769	2,135	20,923	3,690	100	173	277	1125*584*180	1,070	138	932	240	230	580	

TWO RUDDERS TWIN CYLINDER

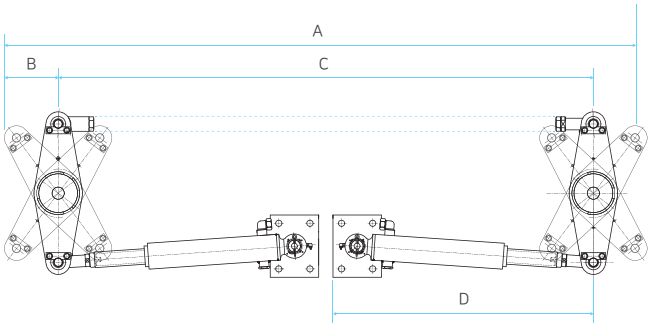

PART NO	MODEL	CYLINDER TORQUE				FLOW RATE (cc/rev)	CYLINDER DIAMETER (Φ)	WEIGHT (kg)	STROKE (mm)	DIMENSION(mm)				REMARK
		MANUAL(60kg/cm²)		POWER(85kg/cm²)										
		kgf·m	N·m	kgf·m	N·m					A	B	C	D	
98163000TW	BTW5019	245	2,403	347	3,405	601	50	50	187	-		-		
98166000TW	BTW6024	461	4,520	653	6,404	1,130	60	60	241	-		-		
98164000TW	TW9020	872	8,551	1,236	12,114	2,137	90	90	199	-	99	-	815	
98170000TW	TW9028	1,216	11,919	1,723	16,886	2,978	90	90	277	-	138	-	932	
98173000TW	TW10028	1,507	14,769	2,135	20,923	3,690	100	100	277	-	138	-	932	

※ Dimension A and C might be different depending on shaft distance of rudder.

RUDDER INDICATOR

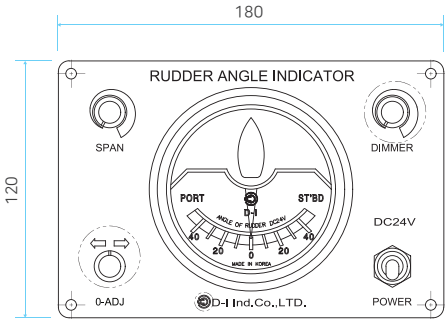

PART NO	MODEL	VOLTAGE	REMARK
98636122	DAI10	DC24V	
98636222	DAI10	DC12V	

RUDDER SENSOR (MANUAL, POWER)

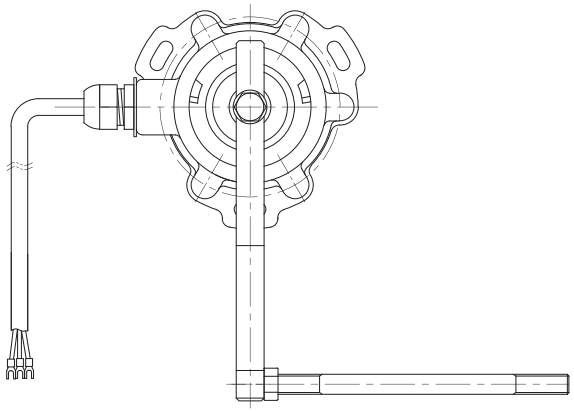

PART NO	MODEL	APPLICATION CYLINDER MODEL	REMARK
98600005	DRSS 5K1	S5015, S5019	
98600009	DRSS 5K2	T5019	
98600016	DRSS 5K3	T6024, S6024, S9020, S9028, T9020	
98600018	DRSS 5K4	T9028, T10028	
98600021	DRSS 5K5	R100, R160	

RUDDER SENSOR (ELECTRONIC HANDLE)

PART NO	MODEL	APPLICATION CYLINDER MODEL	REMARK
98600006	DRSA 5K1	S5015, S5019, S3218	
98600010	DRSA 5K2	T5019	
98600014	DRSA 5K3	S6024, T6024, S9020, T9020	
98600019	DRSA 5K4	T9028, T10028	
98600022	DRSA 5K5	R100, R160	

SINGLE CYLINDER TILLER ASS'Y

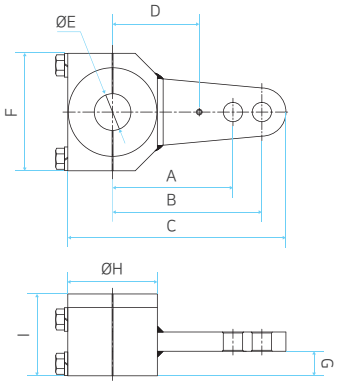

S/SW 5015, 5019

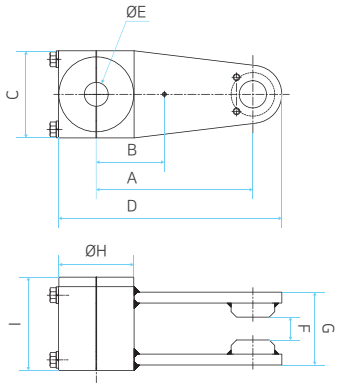

S/SW 6024, 9020, 9028

PART NO	NAME	DIMENSION(mm)									WEIGHT	APPLICATION CYLINDER'S MODEL	REMARK
		A	B	C	D	E	F	G	H	I	(kg)		
98111030	TILLER ASS'Y	125	155	225.5	90	38.1	122	25.5	92	85	7	CYLINDER GROUP_S/SW 5015 / 5019	
98123034	TILLER ASS'Y	200	100	128	255	25	31.6	78	110	110	15	CYLINDER GROUP_S/SW 6024	
98129034	TILLER ASS'Y	230	100	128	285	40	33.6	107	110	137	19	CYLINDER GROUP_S/SW 9020 / 9028	

TWIN CYLINDER TILLER ASS'Y

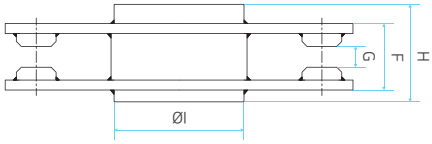

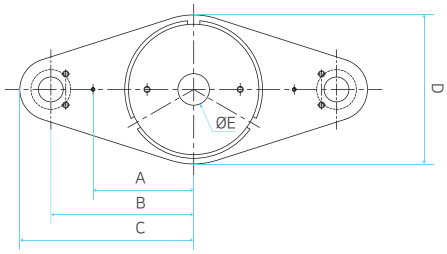

PART NO	NAME	DIMENSION(mm)									WEIGHT	APPLICATION CYLINDER'S MODEL	REMARK
		A	B	C	D	E	F	G	H	I	(kg)		
98161013	TILLER ASS'Y	90	155	190	120	25	78	31.5	100	82	11	CYLINDER GROUP_T/TW 5019	
98164013	TILLER ASS'Y	100	200	235	140	25	78	31.6	100	111	16	CYLINDER GROUP_T/TW 6024	
98167013	TILLER ASS'Y	100	165	215	190	40	107	33.6	134	154	30	CYLINDER GROUP_SW/T/TW 9020	
98173013	TILLER ASS'Y	162	230	280	240	40	107	33.6	157	209	56	CYLINDER GROUP_SW/T/TW 9028, 10028	

ROTARY CYLINDER TILLER ASS'Y

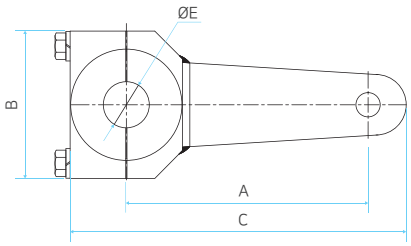

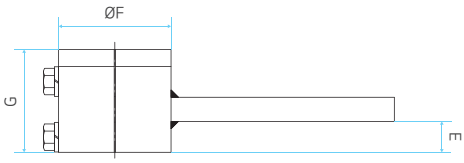

PART NO	NAME	DIMENSION(mm)							WEIGHT (kg)	APPLICATION CYLINDER'S MODEL	REMARK
		A	B	C	D	E	F	G			
99016030	TILLER ASS'Y	200	122	247	38.1	25.5	92	85	4	ROTARY CYLINDER ASS'Y 100R/160R	

MANUAL HANDLE

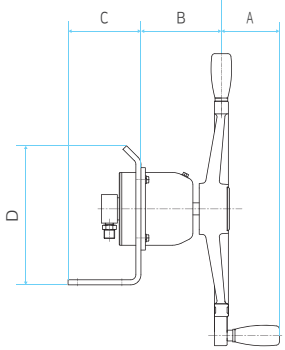

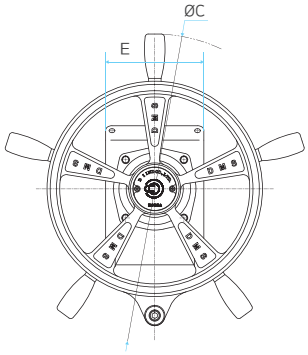

PART NO	MODEL	FLOW RATE (cc/rev)	APPLICATION HANDLE (mm)	HANDLE SHAFT	DIMENSION(mm)					WEIGHT (kg)	REMARK
					A	B	C	D	E		
98114103A	DHM026	26	420	Taper Ø19	92	128	115	220	155	9	
98114103C	DHM035	35	420	Taper Ø19	92	128	115	220	155	9	
98114103E	DHM044	44	420	Taper Ø19	92	128	115	220	155	9	

HELM PUMP (NSH)

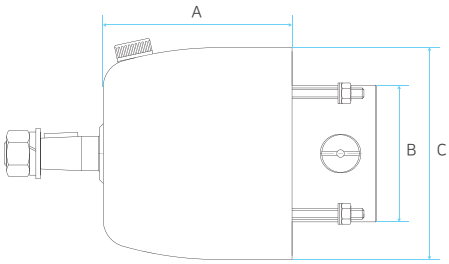

PART NO	MODEL	DISPLACEMENT (CC)	RATED PRESSURE (kgf.㎠)	HANDLE SHAFT	DIMENSION(mm)			WEIGHT (kg)	REMARK
					A	B	C		
C1800005000	NSH026	26	60	Taper Ø19.05	105	76	118	5	
C1800009000	NSH035	35	60	Taper Ø19.05	105	76	118	5	
C1800008000	NSH044	44	60	Taper Ø19.05	105	76	118	5	

HELM PUMP(DHP)

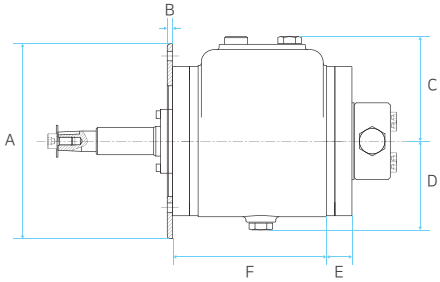

PART NO	MODEL	DISPLACEMENT (CC)	RATED PRESSURE (kgf.㎠)	APPLICATION HANDLE (mm)	HANDLE SHAFT	DIMENSION(mm)						WEIGHT (kg)	REMARK
						A	B	C	D	E	F		
98223000G	DHP050	50	60	800	Taper Ø19.05	183	5	98	83	42	168	10	
98224000G	DHP050	50	60	800	Straight 1″	183	5	98	83	42	168	10	
98226000G	DHP063	63	60	800	Taper Ø19.05	183	5	98	83	42	168	10	
98227000G	DHP063	63	60	800	Straight 1″	183	5	98	83	42	168	10	
98229000G	DHP077	77	60	800	Straight 1″	233	5	98	83	42	168	11	
98232000G	DHP098	98	60	1000	Straight 1″	233	5	98	83	42	168	11	
98235000G	DHP119	119	60	1000	Straight 1″	233	5	98	83	42	168	11	

MANUAL HANDLE

NO	HELM PUMP		MANUAL HANDLE		REMARK
			PICTURE	PART NO	
1	DHP	NSH	MANUAL HANDLE	98200100	Taper Ø19

SAVORETTI ARMANDO
https://savorettisnc.com

NO	HELM PUMP	SAVORETTI ARMANDO HANDLE			REMARK
1	DHP	T2 Φ 30-37-42-49-52-60-65 70-80-90-100-120-150	T6 Φ 40-45-50-60-70 80-90-100-120-130	T5 Φ 42-50-60-70 80-90-100-120	Straight 1"
2	NSH	T4 Φ32-35-37-40-45	T15 B/35 Φ35	T4C Φ 35-40-45	Taper Ø19

Standard : cm

POWER HANDLE

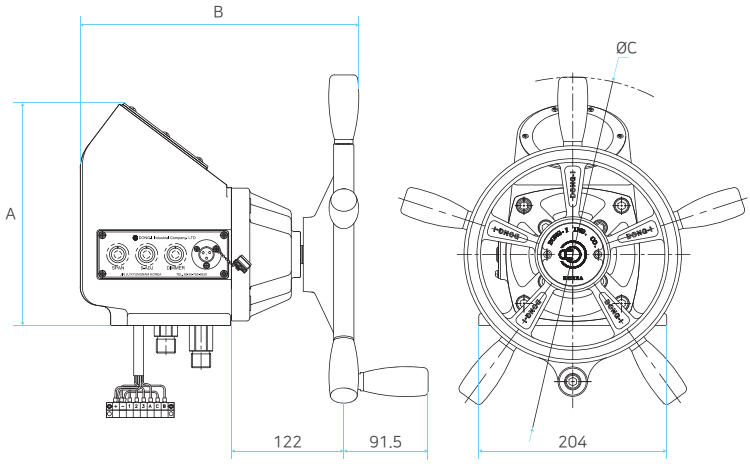

PART NO	MODEL	DISPLACEMENT OF ORBITROL (CC)	WEIGHT (kg)	DIMENSION(mm)			REMARK
				A	B	C	
98261700	DHO 051	51	12	240	302	195	
98264700	DHO 080	80	13	240	302	195	
98267700	DHO 120	120	13	240	302	195	
98269700	DHO 160	160	13	240	302	195	
98272700	DHO 200	200	13	240	302	195	
98273700	DHO 240	240	13	240	302	195	
98276700	DHO 277	277	14	240	302	195	

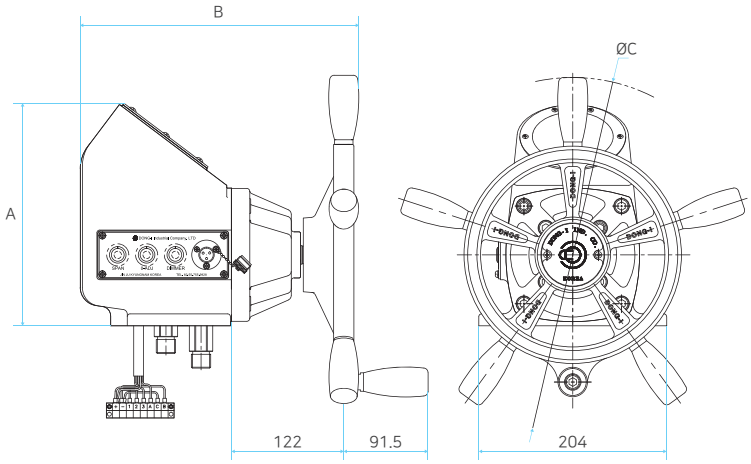

PART NO	MODEL	DISPLACEMENT OF ORBITROL (CC)	WEIGHT (kg)	DIMENSION(mm)			REMARK
				A	B	C	
98261600	ADHO 051	51	12	240	302	195	
98264600	ADHO 080	80	13	240	302	195	
98267600	ADHO 120	120	13	240	302	195	
98269600	ADHO 160	160	13	240	302	195	
98272600	ADHO 200	200	13	240	302	195	
98273600	ADHO 240	240	13	240	302	195	
98276600	ADHO 277	277	14	240	302	195	

STEERING SYSTEM

POWER HANDLE

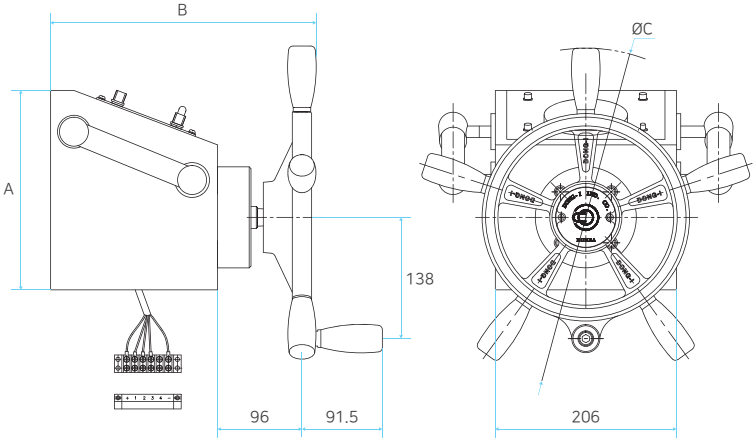

PART NO	MODEL	DISPLACEMENT OF ORBITROL (CC)	WEIGHT (kg)	DIMENSION(mm)			REMARK
				A	B	C	
98265100AP	ASHO 080	80	12	227	302	195	
98268100AP	ASHO 120	120	13	227	302	195	
98269100AP	ASHO 160	160	13	227	302	195	
98270100AP	ASHO 200	200	13	227	302	195	
98274100AP	ASHO 240	240	13	227	302	195	
98280100AP	ASHO 320	320	13	227	302	195	

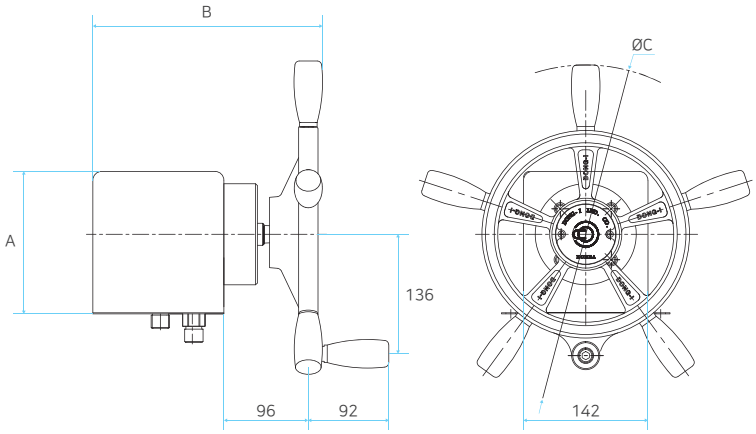

PART NO	MODEL	DISPLACEMENT OF ORBITROL (CC)	WEIGHT (kg)	DIMENSION(mm)			REMARK
				A	B	C	
98263100	GSHO 051	51	11	162	261	195	
98263200	GSHO 080	80	11	162	261	195	
98263300	GSHO 120	120	11	162	261	195	
98263400	GSHO 160	160	12	162	261	195	
98263500	GSHO 200	200	12	162	261	195	
98263600	GSHO 240	240	12	162	261	195	
98263700	GSHO 277	277	13	162	261	195	

STEERING SYSTEM

POWER HANDLE

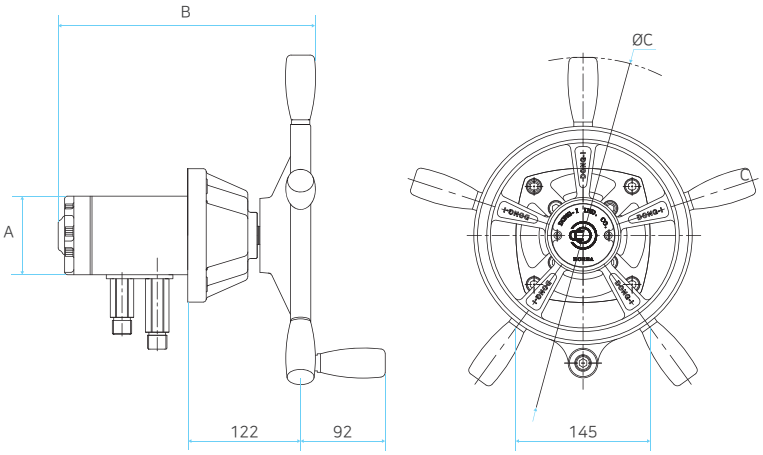

PART NO	MODEL	DISPLACEMENT OF ORBITROL (CC)	WEIGHT (kg)	DIMENSION(mm)			REMARK
				A	B	C	
98261300	DHN 051	51	11	195	259	195	
98264300	DHN 080	80	12	195	263	195	
98267300	DHN 120	120	12	195	268	195	
98269300	DHN 160	160	12	195	274	195	
98272300	DHN 200	200	12	195	278	195	
98273300	DHN 240	240	12	195	284	195	
98276300	DHN 277	277	13	195	290	195	

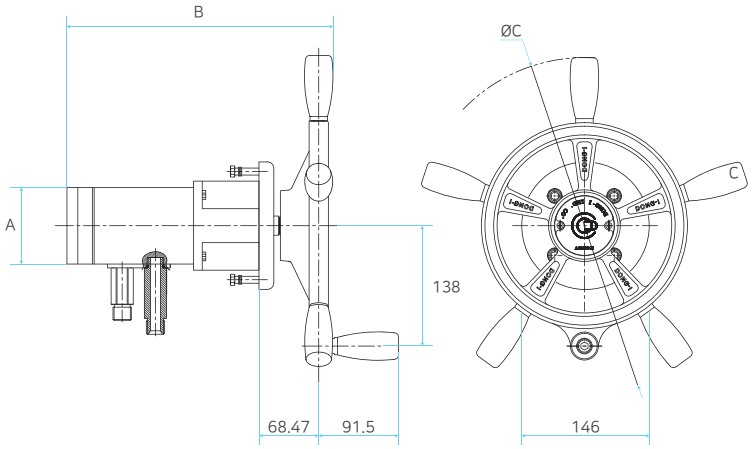

PART NO	MODEL	DISPLACEMENT OF ORBITROL (CC)	WEIGHT (kg)	DIMENSION(mm)			REMARK
				A	B	C	
98264400	DHF 080	80	12	195	284	195	
98267400	DHF 120	120	12	195	290	195	
98269400	DHF 160	160	12	195	296	195	
98272400	DHF 200	200	12	195	300	195	
98273400	DHF 240	240	12	195	306	195	
98276400	DHF 277	277	13	195	312	195	

STEERING SYSTEM

ELECTRONIC HANDLE

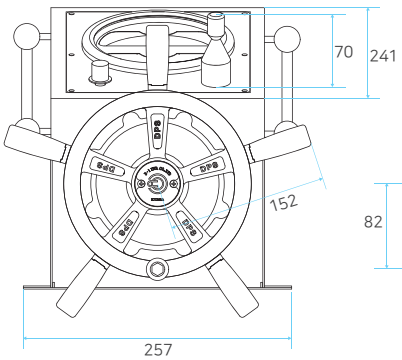

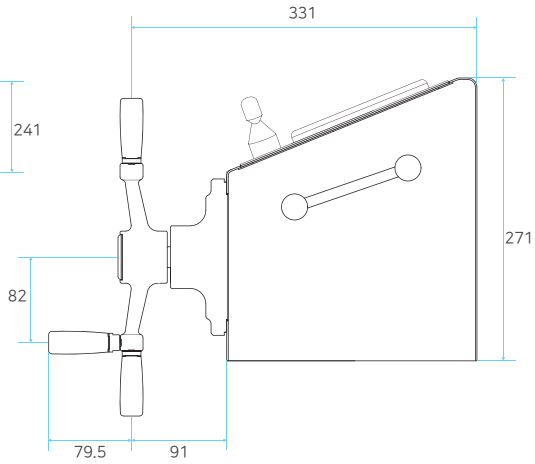

PART NO	MODEL	NUMBERS OF TURNS LOCK TO LOCK	TIME (SECOND) LOCK TO LOCK (TIME)	WEIGHT(kg)	REMARK
98250000	DEH 100	3	10	10	

POWER STEERING HANDLE (SAVORETTI)

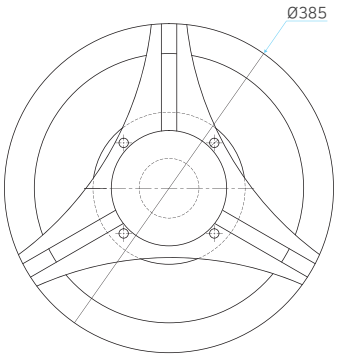

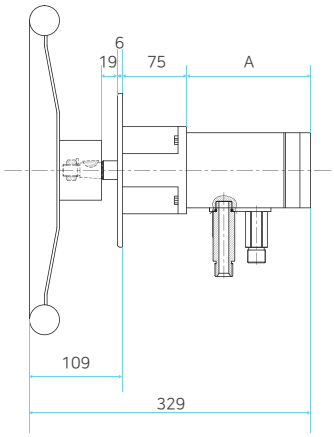

PART NO	MODEL	DISPLACEMENT OF ORBITROL (CC)	WEIGHT (kg)	A (mm)	REMARK
98284100	DHS 051	51	11	120	
98284200	DHS 080	80	12	125	
98284300	DHS 120	120	12	130	
98284400	DHS 160	160	12	136	
98284500	DHS 200	200	12	140	
98284600	DHS 240	240	12	146	
98284700	DHS 277	277	13	152	

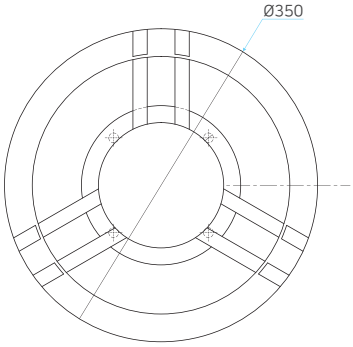

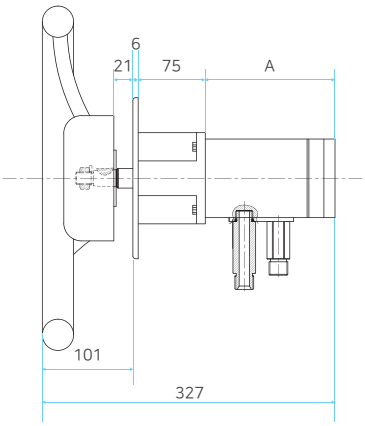

PART NO	MODEL	DISPLACEMENT OF ORBITROL (CC)	WEIGHT (kg)	A (mm)	REMARK
98285100	DHSC051	51	11	120	
98285200	DHSC080	80	12	125	
98285300	DHSC120	120	12	130	
98285400	DHSC160	160	12	136	
98285500	DHSC200	200	12	140	
98285600	DHSC240	240	12	146	
98285700	DHSC277	277	13	152	

ORBITROL

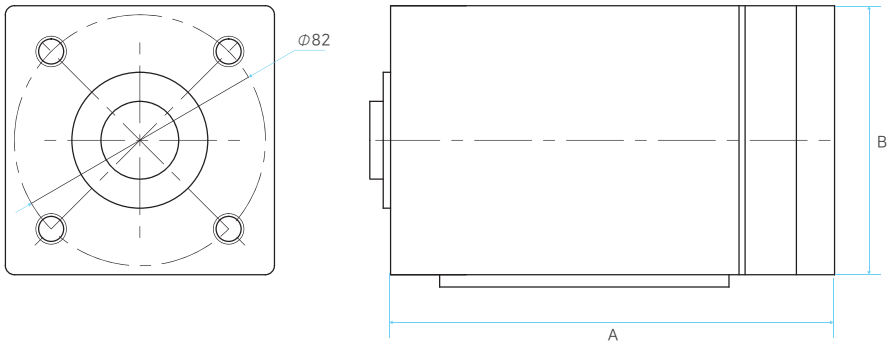

PART NO	MODEL	DISPLACEMENT (CC)	DIMENSION(mm)		WEIGHT (kg)	REMARK
			A	B		
99016102A	N051	51cc/rev	121	84	5	
99016102B	N080	80cc/rev	125	84	6	
99065102A	N120	120cc/rev	130	84	6	
98269160	N160	160cc/rev	136	84	6	
98271200	N200	200cc/rev	140	84	6	
98273240	N240	240cc/rev	146	84	6	
99150102B	N277	277cc/rev	152	84	6	

SOLENOID VALVE

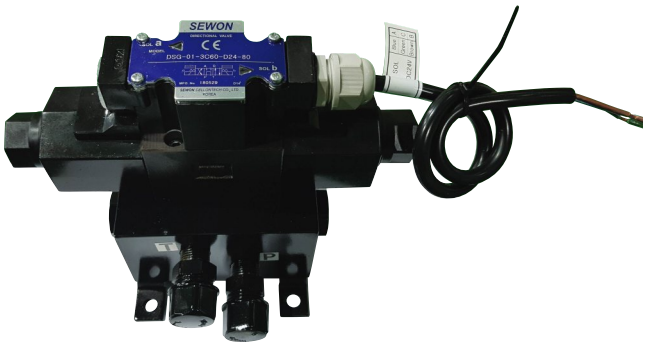

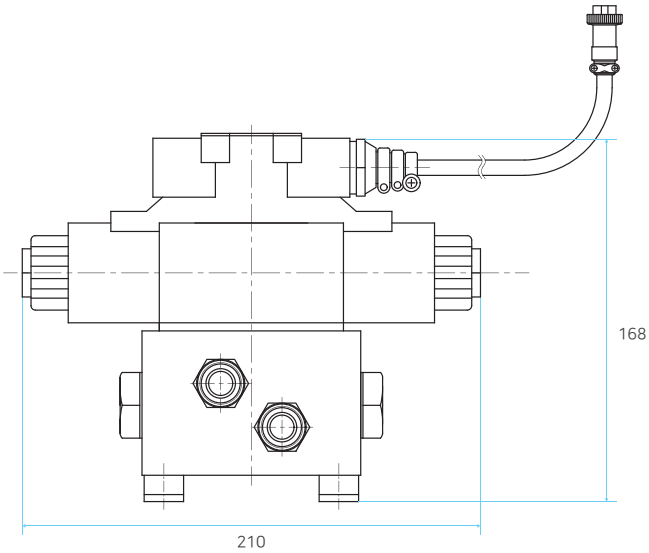

PART NO	MODEL	VOLTAGE (V)	APPLICABLE STEERING SYSTEM MODEL	WEIGHT(kg)	REMARK
99016800AS	DRT10	12V, 24V	ALL POWER STEERING SYSTEM MODEL	8.5	
98117900AS	DRT20	12V, 24V	ALL ELECTRIC STEERING SYSTEM MODEL	8.5	

PUMP DRIVE PULLEY

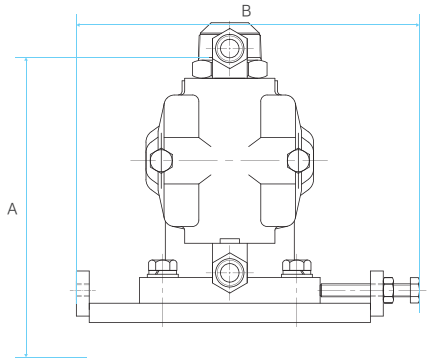

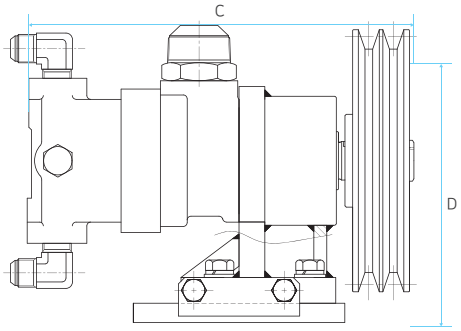

PART NO	MODEL	WEIGHT (kg)	FLOW RATE (cc/rev)	MAXIMUM PRESSURE (kgf/㎠)	MAXIMUM RPM	DIMENSION(mm)				TYPE	PULLEY SIZE (inch)	REMARK
						A	B	C	D			
98451000	DPU-V20F6	25	19.5	85	3400	189	266	295	168	2 GROOVES B TYPE	6	
98451100		25	19.5	85	3400	189	266	295	190	2 GROOVES B TYPE	7	
98451900		25	19.5	85	3400	189	266	295	213	2 GROOVES B TYPE	8	
98451300	DPU-V20F7	25	22.8	85	3000	189	266	295	168	2 GROOVES B TYPE	6	
98451400		25	22.8	85	3000	189	266	295	190	2 GROOVES B TYPE	7	
98451800		25	22.8	85	3000	189	266	295	213	2 GROOVES B TYPE	8	
98451500	DPU-V20F8	25	26.5	85	2800	189	266	295	168	2 GROOVES B TYPE	6	
98451600		25	26.5	85	2800	189	266	295	190	2 GROOVES B TYPE	7	
98451700		25	26.5	85	2800	189	266	295	213	2 GROOVES B TYPE	8	
98453500	DPU-V20F11	25	36.4	85	2500	189	266	295	168	2 GROOVES B TYPE	6	
98453600		25	36.4	85	2500	189	266	295	190	2 GROOVES B TYPE	7	
98453700		25	36.4	85	2500	189	266	295	213	2 GROOVES B TYPE	8	

VANE PUMP

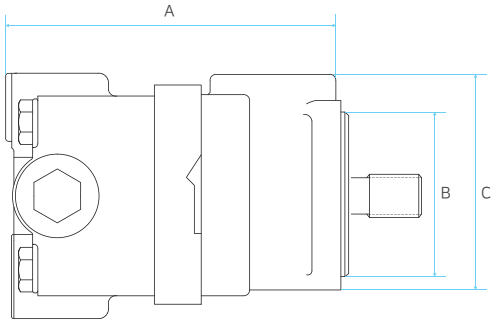

PART NO	MODEL	STANDARD	WEIGHT (kg)	DISPLACEMENT cc/Rev.	MAXIMUM PRESSURE (kgf/㎠)	MAXIMUM RPM	DIMENSION(mm)			REMARK
							A	B	C	
98471100A000	HV20F-6	HV20F-1P6P-15C8F-R	8	19.5	85	3400	125	106	130	
98471110A000	HV20F-7	HV20F-1P7P-15C8F-R	8	22.8	85	3000	132	106	130	
98471120A000	HV20F-8	HV20F-1P8P-15C8F-R	8	26.5	85	2800	132	106	130	
98471130A000	HV20F-11	HV20F-1P11P-15C8F-R	8	36.4	85	2500	137	106	130	

PUMP DRIVE PULLEY

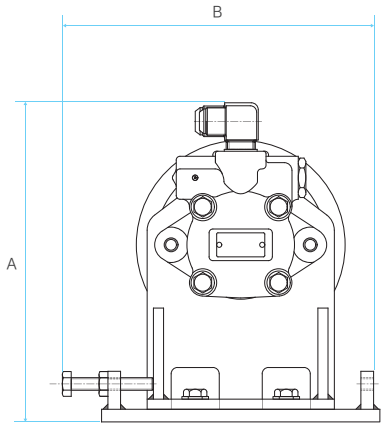

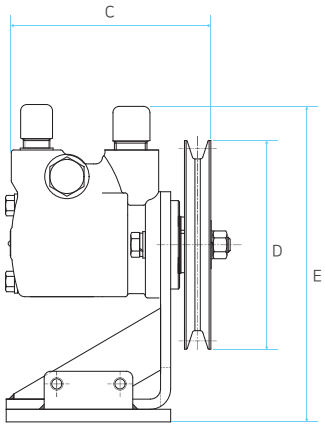

PART NO	MODEL	WEIGHT (kg)	FLOW RATE (cc/rev)	MAXIMUM PRESSURE (kgf/㎠)	MAXIMUM RPM	DIMENSION (mm)					PULLEY SIZE (inch)	REMARK
						A	B	C	D	E		
98452100G	DSP20	12	19.3	85	2500	242	220	158	168	242	6	1 GROOVE B TYPE
98452110G	DSP20	12	19.3	85	2500	242	220	158	190	242	7	1 GROOVE B TYPE
98452120G	DSP20	12	19.3	85	2500	242	220	158	213	242	8	1 GROOVE B TYPE

VANE PUMP

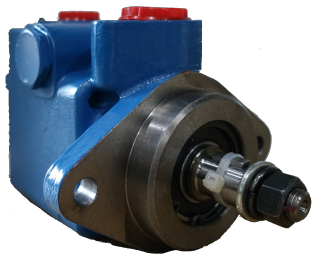

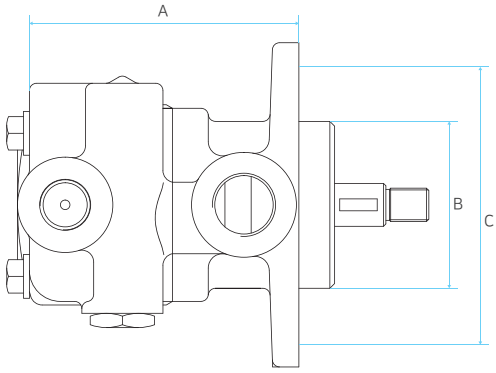

PART NO	MODEL	STANDARD	WEIGHT (kg)	FLOW RATE (cc/rev)	MAXIMUM PRESSURE (kgf/㎠)	MAXIMUM RPM	DIMENSION (mm)				REMARK
							A	B	C		
DSP20F193			5.8	19.3	85	2500	113	70	110		

STEERING SYSTEM

OIL TANK

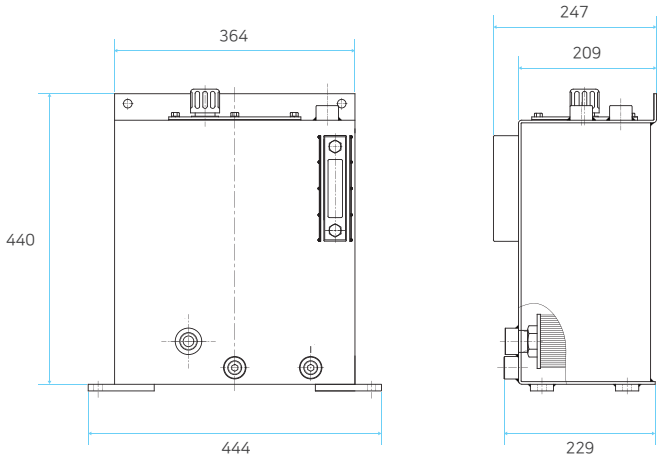

PART NO	MODEL	CAPACITY(ℓ)	WEIGHT(kg)	REMARK
99065401AS	DOT 20	20	23	

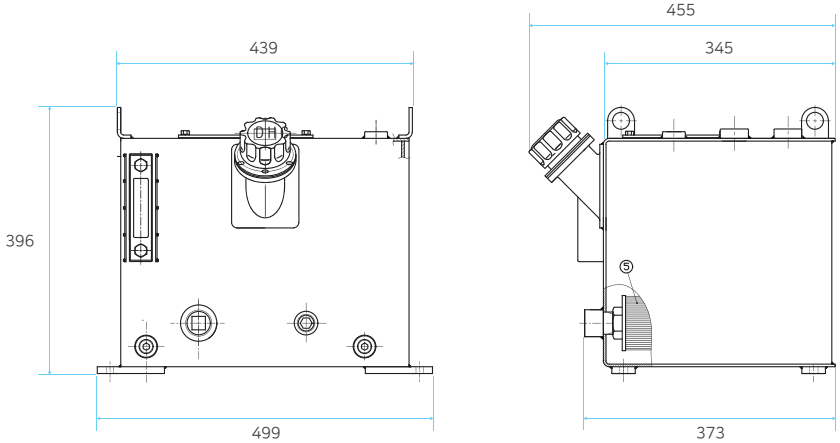

PART NO	MODEL	CAPACITY(ℓ)	WEIGHT(kg)	REMARK
98500200AS	DOT 40	40	39	

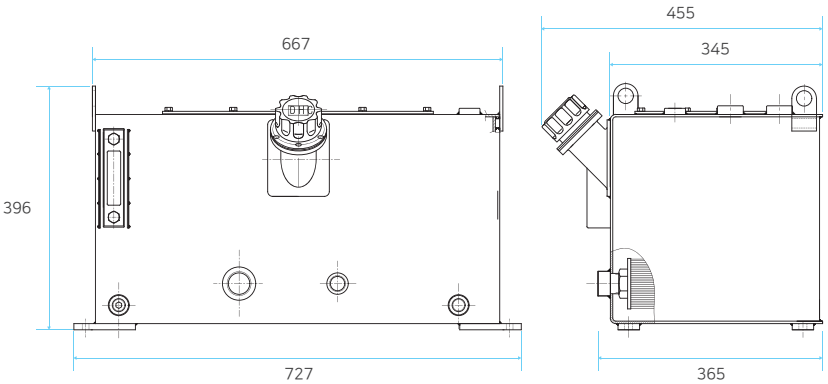

PART NO	MODEL	CAPACITY(ℓ)	WEIGHT(kg)	REMARK
98500300AS	DOT 60	60	50	

STEERING SYSTEM

SINGLE POWER UNIT (50Hz, 60Hz) _ SINGLE MOTOR

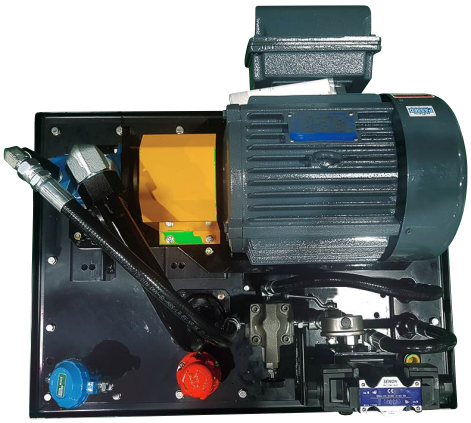

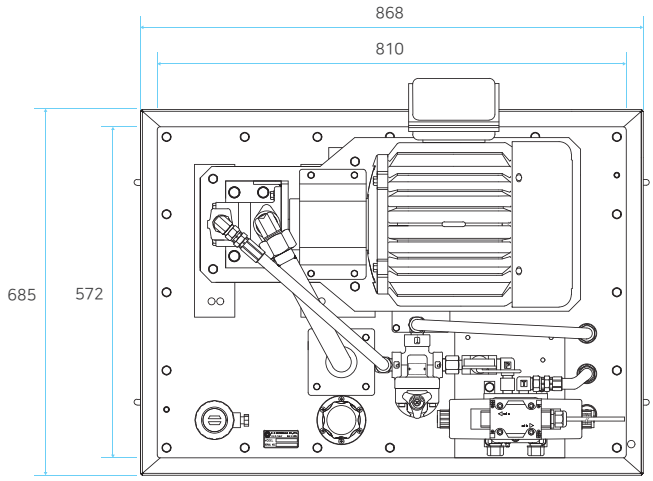

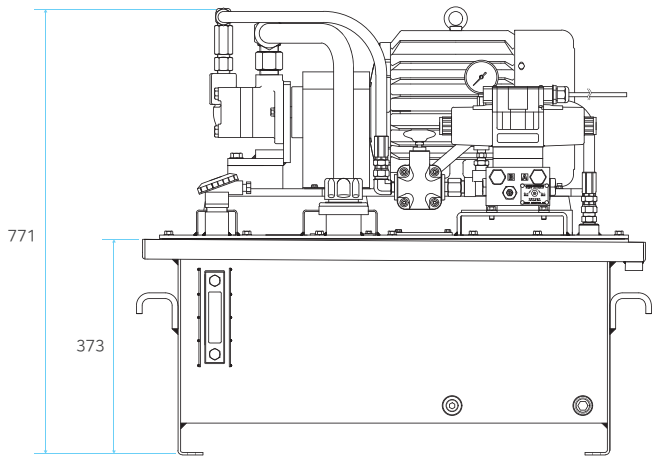

NO	APPLICABLE STEERING SYSTEM MODEL	POWER UNIT MODEL_(220V)	POWER UNIT MODEL_(380V)	POWER UNIT MODEL_400V	POWER UNIT MODEL_440V	WEIGHT (kg)	POWER	REMARK
1	351T/TW	SP222EH2.2M1	SP383EH3.7M1	SP402EH2.2M1	SP442EH2.2M1	150	60Hz	
2	651T/TW	SP222EH2.2M1	SP383EH3.7M1	SP402EH2.2M1	SP442EH2.2M1	160	60Hz	
3	1200T/TW	SP224EH3.7M1	SP384EH3.7M1	SP404EH3.7M1	SP444EH3.7M1	160	60Hz	
4	1600T/TW	SP224EH3.7M1	SP384EH3.7M1	SP404EH3.7M1	SP444EH3.7M1	160	60Hz	
5	2000T/TW	SP224EH3.7M1	SP384EH3.7M1	SP404EH3.7M1	SP444EH3.7M1	160	60Hz	

NO	APPLICABLE STEERING SYSTEM MODEL	POWER UNIT MODEL_(220V)	POWER UNIT MODEL_(380V)	POWER UNIT MODEL_400V	POWER UNIT MODEL_440V	WEIGHT (kg)	POWER	REMARK
1	351T/TW	SP223EH3.7M1	SP383EH3.7M1	SP403EH3.7M1	SP443EH3.7M1	150	50Hz	
2	651T/TW	SP223EH3.7M1	SP383EH3.7M1	SP403EH3.7M1	SP443EH3.7M1	160	50Hz	
3	1200T/TW	SP224EH3.7M1	SP384EH3.7M1	SP404EH3.7M1	SP444EH3.7M1	160	50Hz	
4	1600T/TW	SP224EH3.7M1	SP384EH3.7M1	SP404EH3.7M1	SP444EH3.7M1	160	50Hz	
5	2000T/TW	SP224EH3.7M1	SP384EH3.7M1	SP404EH3.7M1	SP444EH3.7M1	160	50Hz	

STEERING SYSTEM

SINGLE POWER UNIT (50Hz, 60Hz) _ DOUBLE MOTOR

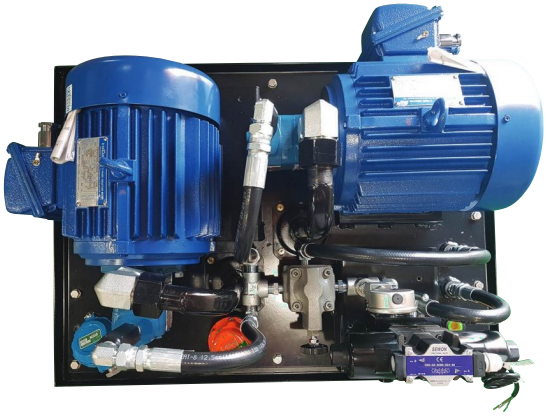

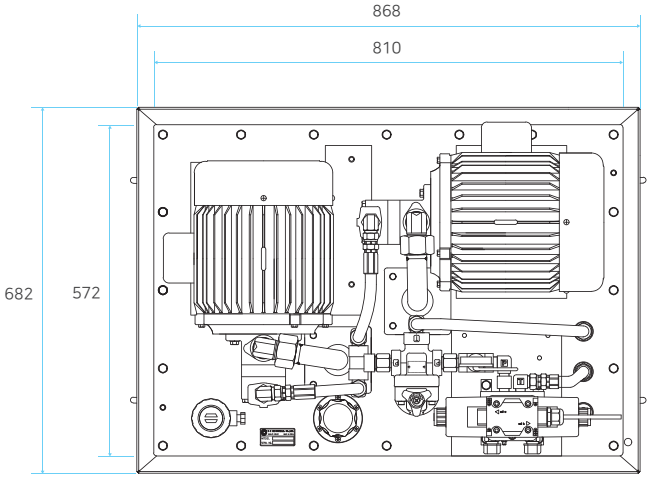

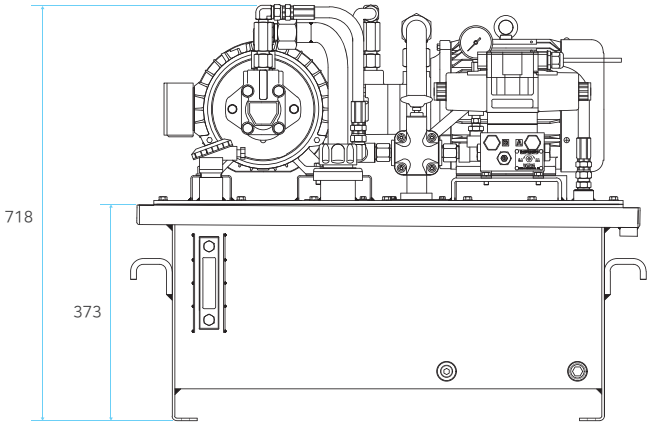

NO	APPLICABLE STEERING SYSTEM MODEL	POWER UNIT MODEL_(220V)	POWER UNIT MODEL_(380V)	POWER UNIT MODEL_400V	POWER UNIT MODEL_440V	WEIGHT (kg)	POWER	REMARK
1	DPS351T/TW	SP222EH2.2M2	SP382EH2.2M2	SP402EH2.2M2	SP442EH2.2M2	210	60Hz	
2	DPS651T/TW	SP222EH2.2M2	SP382EH2.2M2	SP402EH2.2M2	SP442EH2.2M2	210	60Hz	
3	DPS1200T/TW	SP224EH3.7M2	SP384EH3.7M2	SP404EH3.7M2	SP444EH3.7M2	220	60Hz	
4	DPS1600T/TW	SP224EH3.7M2	SP384EH3.7M2	SP404EH3.7M2	SP444EH3.7M2	220	60Hz	
5	DPS2000T/TW	SP224EH3.7M2	SP384EH3.7M2	SP404EH3.7M2	SP444EH3.7M2	220	60Hz	

NO	APPLICABLE STEERING SYSTEM MODEL	POWER UNIT MODEL_(220V)	POWER UNIT MODEL_(380V)	POWER UNIT MODEL_400V	POWER UNIT MODEL_440V	WEIGHT (kg)	POWER	REMARK
1	DPS351T/TW	SP223EH3.7M2	SP383EH3.7M2	SP403EH3.7M2	SP443EH3.7M2	220	50Hz	
2	DPS651T/TW	SP223EH3.7M2	SP383EH3.7M2	SP403EH3.7M2	SP443EH3.7M2	220	50Hz	
3	DPS1200T/TW	SP224EH3.7M2	SP384EH3.7M2	SP404EH3.7M2	SP444EH3.7M2	220	50Hz	
4	DPS1600T/TW	SP224EH3.7M2	SP384EH3.7M2	SP404EH3.7M2	SP444EH3.7M2	220	50Hz	
5	DPS2000T/TW	SP224EH3.7M2	SP384EH3.7M2	SP404EH3.7M2	SP444EH3.7M2	220	50Hz	

STEERING SYSTEM

ALARM BOX

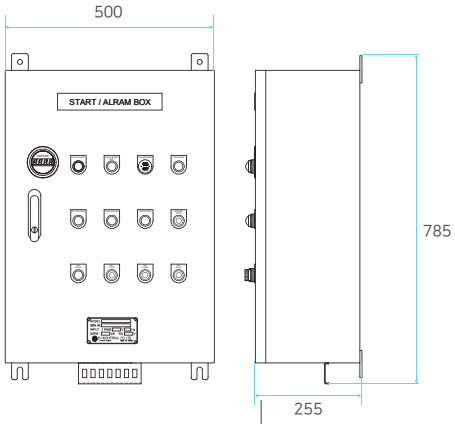

PART NO	PART NAME	VOLTAGE	ELECTRIC POWER (ELECTRIC MOTOR)	SOLENOID VALVE VOLTAGE	FREQUENCY	REMARK
98437100	ALARM BOX	220V, 330V, 400V, 440V	2.2kW, 3.7kW	DC 24V	60Hz	FOR ENGINE ROOM
98437200	ALARM BOX	220V, 330V, 400V, 440V	5.5kW	DC 24V	60Hz	FOR ENGINE ROOM
98437300	ALARM BOX	220V, 330V, 400V, 440V	2.2kW, 3.7kW	DC 24V	50Hz	FOR ENGINE ROOM
98437400	ALARM BOX	220V, 330V, 400V, 440V	5.5kW	DC 24V	50Hz	FOR ENGINE ROOM

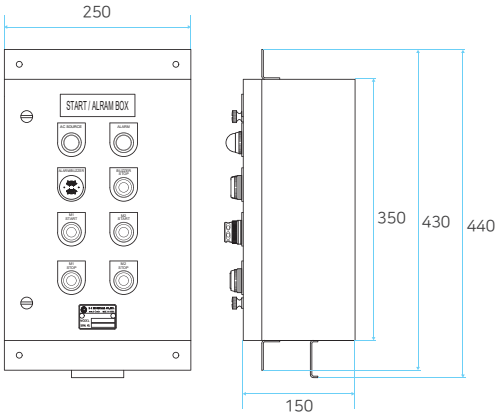

PART NO	MODEL	PART NAME	STANDARD	REMARK
98801501	SCB1	STEERING CONTROL BOX	COMMON	

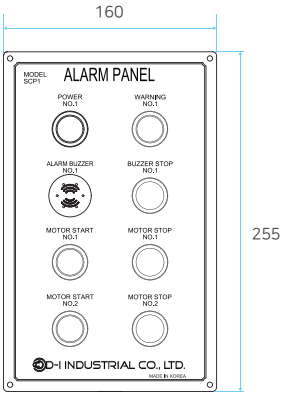

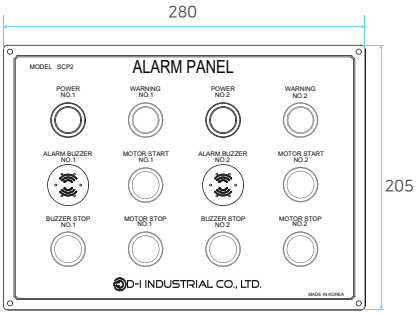

PART NO	MODEL	PART NAME	STANDARD	REMARK
98801600	SCP1	STEERING CONTROL PANEL	SINGLE POWER UNIT & EMERGENCY MOTOR TYPE	
98801700	SCP2	STEERING CONTROL PANEL	DOUBLE POWER UNIT TYPE	

FUNCTIONS OF LOCK VALVE BLOCK GROUP

The lock valve is to use for blocking feedbacks from operating solenoid valve.
If a non-return valve is installed in a helm pump, lock valve is not required.
The lock valve is not necessary for the system line.
If there is an orbitrol on steering system, a lock valve is quite required.

Required Installation Condition

1) Two-handle 2) Autopilot system in orbitrol 3) Solenoid valve

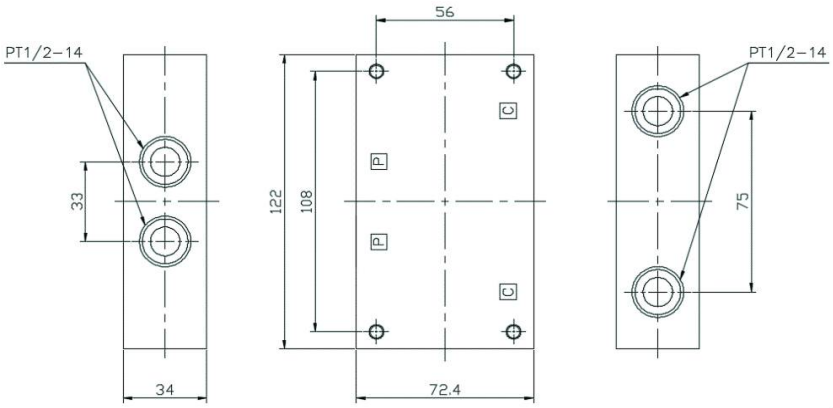

The way of hydraulic hose and fixed connection

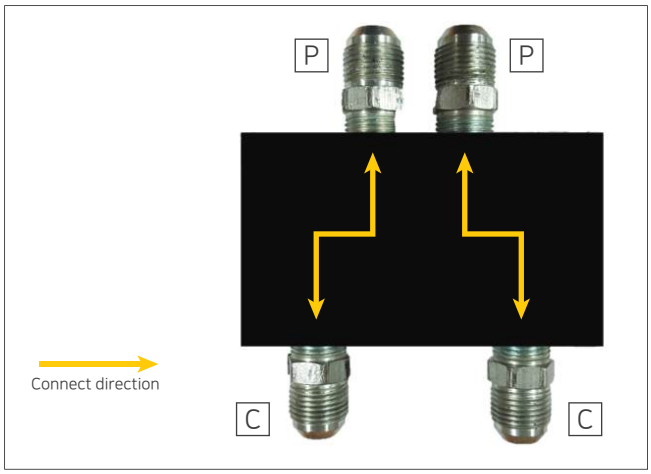

Port "P" : Power Steering Units. (Orbitrol) or connect hydraulic hoses to the "P" port.

Port "C": Connect cylinder's hydraulic hoses to the "C" port

NO	MODEL	PART NO	PART NAME	REMARK
1	DLV85	98740000G	LOCK VALVE BLOCK GROUP	

DIAGRAM_LOCK VALVE BLOCK GROUP

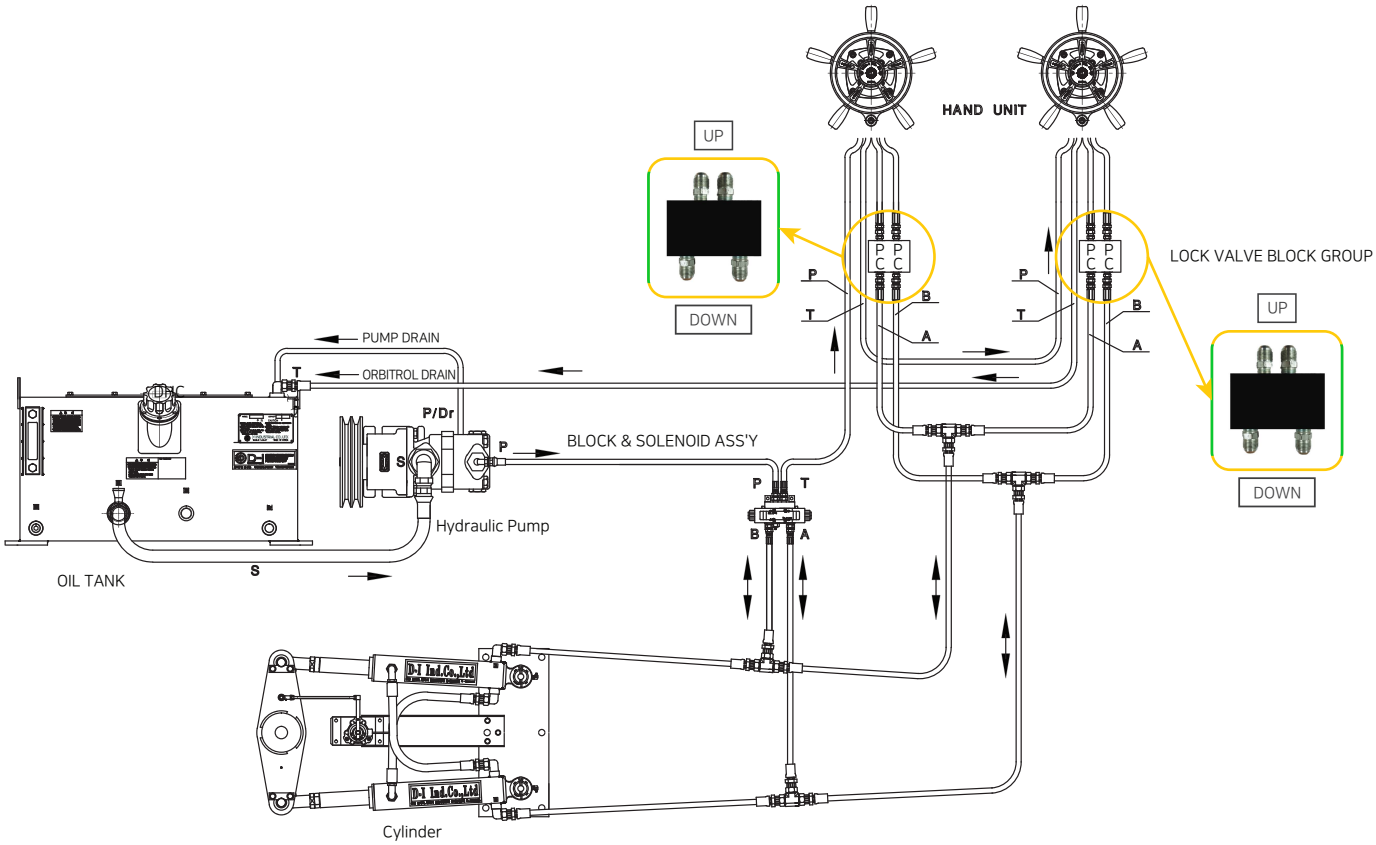

1. EMERGENCY NIPPLE

NO	PART NO	NAME	WEIGHT (kg)	COMPONENTS			REMARK
				PART NAME	PART NO	Q'TY	
1	ST_98291400A	EMERGENCY NIPPLE	1kg	VALVE, 3 WAY (PT 1/2)	98291200	1	DHM-DHM
				NIPPLE (PF 3/8)	98811101	3	
2	ST_98291500A	EMERGENCY NIPPLE	1kg	VALVE, 3 WAY (PT 1/2)	98291200	1	DHP-DHM
				NIPPLE (UNF 7/8)	98065241	2	POWER HANDLE-DHM
				NIPPLE (PF 3/8)	98811101	1	DEH-DHM
3	ST_98291600A	EMERGENCY NIPPLE	1kg	VALVE, 3 WAY (PT 1/2)	98292201	1	DHP-DHP
				NIPPLE (UNF 7/8)	98065241	3	POWER HANDLE-DHP

2. CATAMARAN NIPPLE

NO	PART NO	NAME	WEIGHT (kg)	COMPONENTS			REMARK
				PART NAME	PART NO	Q'TY	
1	ST_98292100A	CATAMARAN NIPPLE	1kg	BALL VALVE (PT 1/2)	98292201	1	DHM
				T-NIPPLE (PF 3/8)	98292104	2	
2	ST_98292200A	CATAMARAN NIPPLE (DHP)	1kg	BALL VALVE (PT 1/2)	98292201	1	DHP, POWER
		CATAMARAN NIPPLE (POWER)		T-NIPPLE (UNF 7/8)	98292202	2	

3. T-NIPPLE

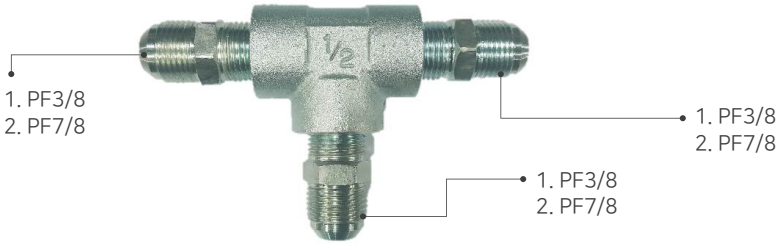

NO	PART NO	NAME	WEIGHT (kg)	COMPONENTS			REMARK
				PART NAME	PART NO	Q'TY	
1	ST_98291700A	T-NIPPLE (MANUAL)	1kg	ADAPTER	99016836	1	
				NIPPLE PF 3/8	98811101	3	
2	ST_98291800A	T-NIPPLE (POWER)	1kg	ADAPTER	99016836	1	
				NIPPLE UNF 7/8	98065241	3	

SWITCH

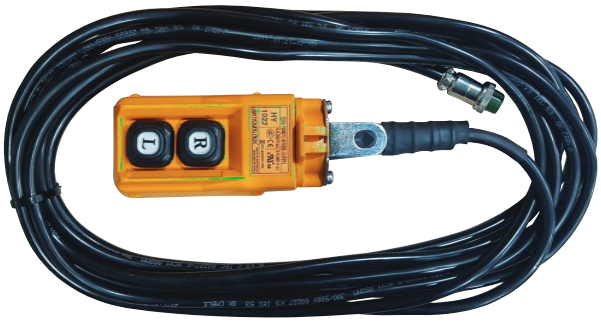

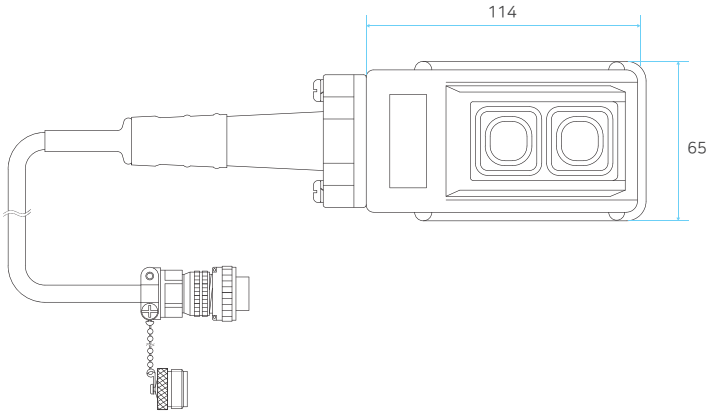

PART NO	MODEL	APPLICABLE STEERING SYSTEM MODEL	REMARK
98117830	HY-1022	ALL POWER STEERING SYSTEM	

CONTROL BOX

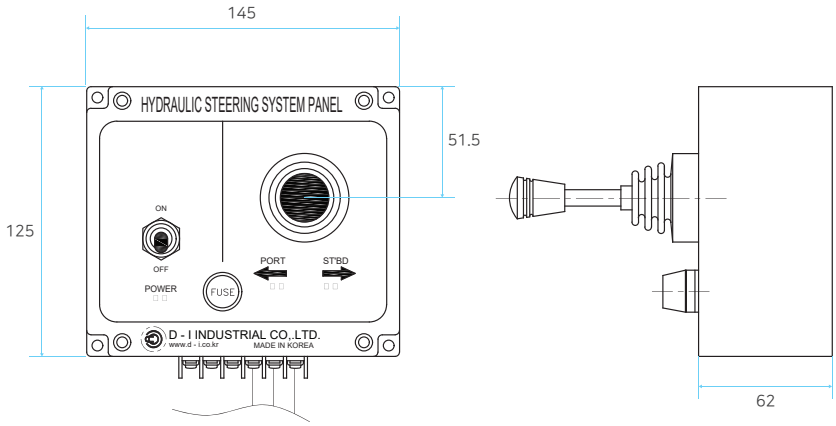

PART NO	MODEL	APPLICABLE STEERING SYSTEM MODEL	REMARK
98684001	DSC 10	ALL POWER STEERING SYSTEM	-

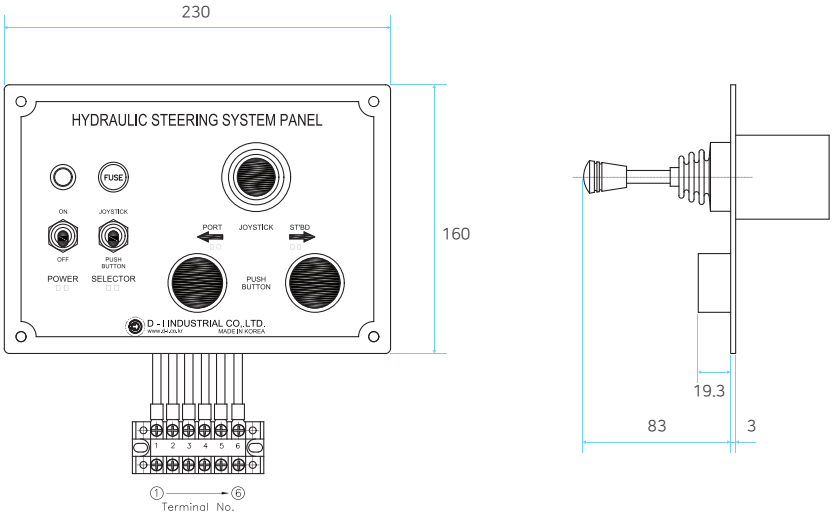

PART NO	MODEL	APPLICABLE STEERING SYSTEM MODEL	REMARK
98684004	DSC 20	ALL POWER STEERING SYSTEM	FOR VIETNAM

MARINE TRANSMISSON
HYDRAULIC STEERING SYSTEM
ELECTRONIC STEERING SYSTEM
POWER TAKE OFF
SIDE THRUSTER
ELECTRONIC CONTROL SYSTEM
FLEXIBLE COUPLING_CENTA
HYDRAULIC PUMP, MOTOR
WATER MAKER

D-I INDUSTRIAL CO., LTD.

Copyright (C) D-I INDUSTRIAL CO., LTD. All rights reserved.
(52781) 13, Namgang-ro 1367 beon-gil, Jinju-si, Gyeongsangnam-do , Korea
TEL +82-55-760-5520 / FAX +82-55-760-5529 / Email : dicl@d-i.co.kr